# Planning Commission

Regular Meeting
# AGENDA

***To participate or view the virtual meeting, go to the following link:***
***https://zoom.us/j/91264543193***
***Or you can call in using your telephone only:***

- ***Dial Toll Free: 1-833-548-0276 or 833-548-0282***
- ***To Raise hand: enter *9***
- ***To Speak after being recognized: enter * 6 to unmute yourself***

***Or One tap mobile (for easy connection on smartphones):***
***US:*** *+16699009128,,91264543193# or 13462487799,,91264543193#*

*Alternatively, you may view the meeting (without participating) by clicking on the name of the meeting at www.cityofukiah.com/meetings.*

**February 23, 2022 - 6:00 PM**

---

The following items listed are considered routine and will be enacted by a single motion and roll call vote by the Ukiah Valley Board of Directors. Items may be removed from the Consent Calendar upon request of a Director or a citizen in which even the item will be considered at the completion of all other items on the agenda. The motion by the Board on the Consent Calendar will approve and kale findings in accordance with Administrative Staff and/or the District Board recommendations.

**2. ROLL CALL**

**3. PLEDGE OF ALLEGIANCE**

**4. APPROVAL OF MINUTES**

4.a. Approval of the Minutes of February 9, 2022, a Regular Meeting.
***Recommended Action: Approve the Minutes of February 9, 2022, a Regular Meeting.***
Attachments:
1. February 9, 2022, PC Minutes-Draft

**5. APPEAL PROCESS**

**6. COMMENTS FROM AUDIENCE ON NON-AGENDA ITEMS**

**7. SITE VISIT VERIFICATION**

**8. VERIFICATION OF NOTICE**

**9. PLANNING COMMISSIONERS REPORT**

**10. DIRECTOR'S REPORT**

**11. CONSENT CALENDAR**

**12. NEW BUSINESS**

12.a. Request for consideration of a 'Dispensary Use Permit' to conduct the sale and delivery of cannabis and/or cannabis products from an existing commercial structure located at 195 Seminary Avenue, Ukiah, 95482; APN 002-272-16-00; File No. 21-6584.

***Recommended Action: Staff Recommends Planning Commission approve the proposed Dispensary Use Permit, based on the Findings in Attachment 1, and subject to the Conditions of Approval in Attachment 2 included in the Staff Report, dated February 10, 2022.***

Attachments:

1. Draft Findings
2. Draft Conditions of Approval
3. Application Materials
4. Product Intake and Dispatch
5. Agency Referral
6. Public Comment - 1

**13. UNFINISHED BUSINESS**

**14. ADJOURNMENT**

Please be advised that the City needs to be notified 72 hours in advance of a meeting if any specific accommodations or interpreter services are needed in order for you to attend. The City complies with ADA requirements and will attempt to reasonably accommodate individuals with disabilities upon request. Materials related to an item on this Agenda submitted to the Planning Commission after distribution of the agenda packet are available at the Civic Center 300 Seminary Ave. Ukiah, CA 95482; and online at: www.cityofukiah/meetings/ at the end of the next business day.

I hereby certify under penalty of perjury under the laws of the State of California that the foregoing agenda was posted on the bulletin board at the main entrance of the City of Ukiah City Hall, located at 300 Seminary Avenue, Ukiah, California, not less than 72 hours prior to the meeting set forth on this agenda.

Dated: February 17, 2022
Stephanie Abba
Planning Commission Secretary

**CITY OF UKIAH**
**PLANNING COMMISSION REGULAR MEETING**
**MINUTES**
**Virtual Meeting Link**
**https://zoom.us/j/91264543193**
**Ukiah, CA 95482**
**February 9, 2022**
**6:00 p.m.**

---

**1. CALL TO ORDER**

The City of Ukiah Planning Commission held a Regular Meeting on February 9, 2022. The meeting was legally noticed on February 3, 2022. Chair Christensen called the meeting to Order at 6:00 p.m. on the following virtual link: **https://zoom.us/j/91264543193**

*CHAIR CHRISTENSEN PRESIDING*.

**2. ROLL CALL**

Roll was taken with the following **Commissioners Present**: Rick Johnson; Michelle Johnson; Alex de Grassi; Mark Hilliker; and Laura Christensen. **Commissioners Absent:** None; **Staff Present:** Craig Schlatter**,** Community Development Director; Mireya Turner, Planning Manager; and Stephanie Abba, Planning Commission Secretary.

**3. PLEDGE OF ALLEGIANCE**

*The Pledge of Allegiance was recited.*

**4. APPROVAL OF MINUTES**

**a. Approval of the Draft Minutes of January 12, 2022, a Regular Meeting and January 26, 2022, a Regular Meeting.**

**Motion/Second:** R. Johnson/de Grassi to approve the Minutes of January 12, 2022, a Regular Meeting; and January 26, 2022, a Regular Meeting as submitted. Motion **carried** by the following roll call vote: AYES: R. Johnson, M. Johnson, de Grassi, Hilliker, and Chair Christensen. NOES: None. ABSENT: None. ABSTAIN: None.

**5. APPEAL PROCESS**

*No appeals were received.*

**6. COMMENTS FROM AUDIENCE ON NON-AGENDA ITEMS**

*No public comment was received*

**7. SITE VISIT VERIFICATION**

*Verified by Commissioners*

**8. VERIFICATION OF NOTICE**

*Verified by Staff*

**9. PLANNING COMMISSIONERS' REPORTS**

*No Reports were given*

**10. PLANNING COMMISSION DIRECTOR'S REPORT**

*Report received*

**11. CONSENT CALENDAR**

*No items on the consent calendar.*

**12. NEW BUSINESS**

**a. Consideration of a Proposed Offer of Public Artwork, to be located at the Alex Thomas Plaza; 310 South State Street (APN 002-265-09).**

**Presenter:** Mireya Turner, Planning Manager

**Public Comment:** Pinky Kushner

**Motion/Second:** R. Johnson/Hilliker After further discussion, the motion was amended to include painting the wall that is attached to the wall to be painted by the Artist. After further discussion, the amended motion was withdrawn. **Motion/Second** R. Johnson/Hilliker to Approve the public artwork in the Alex Thomas Plaza; 310 South State Street by Danza Davis, as submitted. Motion **carried** by the following roll call vote: AYES: R. Johnson, M. Johnson, de Grassi, Hilliker, and Chair Christensen. NOES: None. ABSENT: None: ABSTAIN: None.

**b. Discussion and Possible Action Regarding Professional Development Opportunities in 2022.**

**Presenter:** Craig Schlatter, Community Development Director

**Public Comment:** Pinky Kushner

All Commissioners would like to attend in person Planning Commissioners Conference. Commissioner Hilliker will attend the conference at SSU and will pay for his own expenses. Commissioners Rick Johnson, Michelle Johnson, Alex De Grassi, and Laura Christensen would like to attend the conference held by the League of California Cities. It was discussed and decided that only two commissioners may attend the conference at a time. Commissioner Michelle Johnson and Alex De Grassi will attend the conference in March 2022, and Commissioners Laura Christensen and Rick Johnson will wait until 2023.

Craig Schlatter, Community Development Director, will look into the budget and discuss the cost of these conferences with the City Clerk and City Manager. This item will be put on the next agenda for discussion after the Community Development Director finds out more information on the Logistics and the Planning Commission budget.

**13. UNFINISHED BUSINESS**

*No Unfinished Business was agendized.*

**14. ADJOURNMENT**

There being no further business, the meeting adjourned at 7:33 p.m.

_____

Stephanie Abba, Planning Commission Secretary

DRAFT

**AGENDA ITEM NO. 12a**
Department of Community Development
Planning Division
300 Seminary Ave.
Ukiah, CA 95482

City of Ukiah

**DATE:** February 17, 2022

**TO:** Planning Commission

**FROM:** Jesse Davis, Planning Manager

**SUBJECT:** Review and consider a 'Dispensary Use Permit' to conduct the sale and delivery of cannabis and/or cannabis products from an existing commercial structure located at 195 Seminary Avenue, Ukiah, 95482; APN 002-272-16-00; File No. 21-6584.

## SUMMARY

| | |
|---|---|
| OWNERS: | The Hub Co, LLC |
| APPLICANT: | Dylan McGinty |
| AGENT: | Robert J. Molineaux |
| LOCATION: | 195 Seminary Avenue; APN: 002-272-16-00 |
| TOTAL ACREAGE: | ±0.07 acre |
| GENERAL PLAN: | Commercial (C) |
| ZONING DISTRICT: | Community Commercial (C-1) |
| AIRPORT COMPATIBILITY: | Zone "4" Outer Approach/Departure Zone; Urban Overlay |
| ENVIRONMENTAL DETERMINATION: | Categorical Exemption, pursuant to CEQA Guidelines Article 19, Class 1, Section 15301, Existing Facilities (a) – Minor interior and exterior alterations. |
| RECOMMENDATION: | Approve with Conditions (see Draft Findings in **Attachment 1** and Draft Conditions of Approval in **Attachment 2**). |

## PROJECT DESCRIPTION AND BACKGROUND

The application for the required 'Dispensary Use Permit' was submitted on October 13, 2021 by Dylan McGinty (Project Applicant) of Local Roots LLC. The application requests a cannabis retail business that would include the delivery of cannabis and/or cannabis products from the subject property. Per Ukiah City Code (UCC), a "Dispensary" is a facility, fixed or mobile, operated in accordance with State and local regulations, where cannabis and/or cannabis products are offered for retail sale. The application materials and project description for this request are further detailed within **Attachment 3**. Specific project components, improvements and requests, include:

- Operation of a dispensary and delivery of cannabis and/or cannabis products from an existing 2,040 square foot (sf), one-story commercial structure.
- Installation of three street trees along School Street, and one street tree along Seminary Ave.;

- Update the exterior paint selection, including Graycloth (PPU26-09) with Moroccan Red (1301) accent as conveyed in **Attachment 3**;
- Installation of awning replacements along Seminary Avenue and School Street;
- Installation of signage, including a 4' x 8' "Local Roots" sign along Seminary Street, as well as an 8' x 17' wall-sign along School Street;
- Installation of security features such as surveillance cameras, alarms, card reader entry;
- Operating hours for Local Roots would be as follows:
    - **Monday-Friday** 9:00 a.m. to 9:00 p.m.
    - **Saturday**: 9:00 a.m. to 9:00 p.m.
    - **Sunday**: 9:00 a.m. to 9:00 p.m.
- Conversion of an on-street parking space along School Street into a designated 'Loading Zone' as conveyed in **Attachment 4**;
- The business will be staffed with a minimum of three employees at all times.

As described, construction activities for the project will be minimal, consisting of internal tenant improvements to reconfigure the existing floor-area for retail, security operations, and support space (office(s), break room, bathroom) as well as secure storage space.

The last business to utilize the subject structure was *Mixies,* a restaurant. In 2016, *Mixies* conducted interior improvements to facilitate use of the structure as a restaurant. Exterior alterations facilitated at that time resulted in the structure's current paint selection. *Mixies* business license expired October 16, 2020, and the structure has remained vacant since that time.

Installed under the *City's Façade Improvement Program*, the existing outdoor awnings adorning the building were undertaken in conjunction with adjacent storefronts (175 and 185 Seminary Avenue). This shared request was approved for funding by the Design Review Board on November 23, 1993. Since that time, however, no business or improvement requiring discretionary review has been received by City staff for this subject property. Having significantly deteriorated, the corresponding awnings at 175 and 185 Seminary Ave. were removed in 2020.

## SURROUNDING LAND USE & ZONING

The Project Site is located at the intersection of Seminary Avenue and South School Street at 195 Seminary Avenue. It maintains a General Plan land use designation of Commercial (C) with a corresponding zoning designation of Community Commercial (C-1). It is located just outside of the 'Downtown Zoning District', but within the 'Downtown Design District'. Seminary Avenue is one of the City's two boulevards. It is a wide, multi-lane thoroughfare, divided with a central median that includes areas for parking and wide sidewalks for pedestrian usage. The central median of Seminary Ave. features landscaping that is now well integrated into the recently completed Downtown Streetscape Improvement Project. The boulevard's western terminus concludes at the Ukiah Civic Center, which is adjacent to the Ukiah Memorial Veteran's Hall.

The Project Site is adjoined to the south, east and west by commercial uses including a salon and professional office (APN 002-272-15), gymnasium (APN 002-272-03), and a professional office complex that includes a hair salon, driving school and internet service provider (APN 002-271-03). The adjacent easterly parcel (002-272-15) also features two residential units (173 & 177 Seminary Ave.). To the north, on the opposite side of Seminary Avenue, there is a vacant multi-story motel.

Upon review, it was determined that the Project Site features no combining districts or other zoning restrictions, and is not subject to any mapped flood or seismic hazards.

Additionally, there are no water courses, wildlife, wildlife-habitat, or designated floodway, nor are there any identified environmentally sensitive habitat areas on or within proximity to the subject property. Neither the property, nor its structure, are included on the City of Ukiah's Historic and Architectural Inventory Table. A summary of zoning designations and nearby uses is provided below in **Table 1**. A General Plan Land Use Map is depicted in **Figure 1**, a Zoning Map is depicted in **Figure 2**, and an aerial map of the site and are is included in **Figure 3**.

**Table 1: Surrounding Zoning and Land Uses**

| | ZONING | USE |
|---|---|---|
| NORTH | GU - General Urban (GU) | Vacant - Multi-Story Motel |
| EAST | Community Commercial (C1) | Hair Salon; Commercial Storefront |
| SOUTH | Community Commercial (C1) | Cross-Fit Gymnasium |
| WEST | Community Commercial (C1) | Professional Office |

***Figure 1. General Plan Land Use***

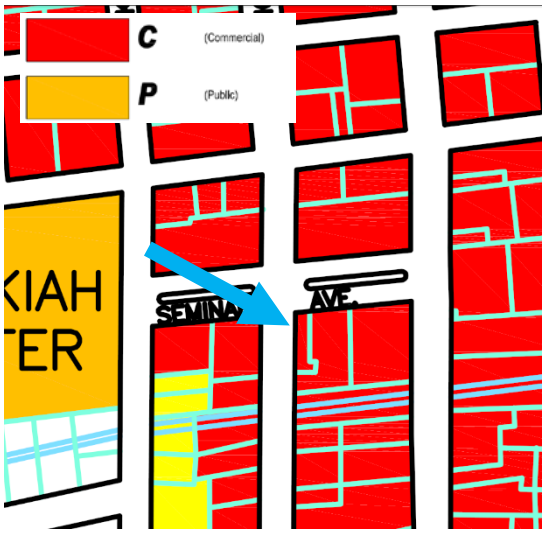


***Figure 2. Zoning Designation***

***Figure 3. Aerial View***

***Figure 4. Street View (Existing)***

## AGENCY COMMENTS

Project referrals were sent to the following responsible or trustee agencies with interest or jurisdiction over the project: California Department of Cannabis Control, Ukiah Valley Fire Authority, City of Ukiah Public Works, City of Ukiah Police Dept., City of Ukiah Electrical Utility, City of Ukiah Community Development Department-Building Division, and the Mendocino County Department of Planning and Building Services. The agencies' comments and recommended Conditions of Approval are contained in **Attachment 5**.

A complete list of identified Conditions of Approval are included in **Attachment 2**.

## STAFF ANALYSIS

### General Plan and Zoning Consistency

***General Plan***: The General Plan land use designation of the parcel is "C" (Commercial). The proposed request is aligned with the intent of this designation, as it would allow a retail business to locate within an existing commercial structure on a property previously developed and adequately served by utilities. As required by the Ukiah Valley General Plan (1995), the property is accessible via a publicly maintained road classified as a 'Collector'.

Per the City's Historic and Architectural Element, by maintaining and reusing the existing commercial structure, the request is further supported by the following General Plan Goals listed in **Table 2:**

| Table 2: General Plan Analysis | |
|---|---|
| **GP Policy Implementation** | **Staff Analysis** |
| *HA-3.2:* Encourage *adaptive reuse* compatible with neighborhoods. | While the subject structure is not listed on any local or State Historic Registry, it was built prior to 1960. The adaptive reuse of this structure is an effective opportunity to optimize the operational and commercial performance of a built asset along Seminary Avenue. Preserving the corridor's character, architectural and cultural integrity, which includes the Ukiah Civic Center and Veterans Memorial Building, is crucial to maintaining a unique sense of place within Ukiah. |
| HA-4: Conserve the character and architecture of neighborhoods. | While not a neighborhood discussed within the 1995 General Plan, Staff considers the visual character of surrounding developments when reviewing discretionary project approvals. By not substantially altering or demolishing the subject structure, the Applicant conserves the character of and context of Seminary Ave. |

While cannabis is not explicitly identified within the City's General Plan, there are substantial similarities to the industries identified in this document within the context of economic development. The proposed dispensary is aligned with the General Plan's understanding that the City and County require close working industry-based relationships that utilize the existing resource-based economy.

Per the City's 1995 General Plan, *"The economy of Ukiah is completely integrated with the unincorporated areas of the valley, and the goals and policies envisioned for Ukiah have application to the rest of Mendocino County and to a lesser extent much of Northern California. Therefore, in creating an ongoing process of economic development, the creation of a close working relationship between the city and county…is essential…. Building upon the existing resource-based economy (agriculture, forestry, fisheries, and natural environment) in a sustainable manner becomes the central guiding elements of the future economic development of the Valley."*

Economic development goals and policies are further discussed within the subsequent Specific Plan/Ukiah Valley Area Plan.

***Specific Plan***: While not binding to the City of Ukiah, the Ukiah Valley Area Plan (UVAP) represents a commitment to a comprehensive and long range inter-jurisdictional planning between the County of Mendocino and the City of Ukiah that represents a shared vision for the Ukiah Valley. The goals that promote business development, include emphasizing local ownership that retain capital and jobs within the region, which is applicable to this project request. In particular, UVAP Land Use Policy 5.2, dictates that the City and County facilitate investment in "value added" industries, especially agriculture and timber. As the economy of Ukiah is considerably integrated with surrounding unincorporated areas, which continue to feature substantial cannabis cultivation activities, encouraging related commercial components such as retail, manufacturing and processing within the City of Ukiah is aligned with Land Use Policy 5.2.

Additionally, the UVAP encourages business development and employment opportunities that emphasize local ownership of businesses in order to keep capital and growth within the community. As noted in the application materials, the Applicant and ownership group are based in nearby unincorporated communities of Redwood Valley and Potter Valley.

***Zoning***: Per UCC §9082, Cannabis Retail is a Permitted Use within the C-1 zoning districts upon securing a 'Dispensary Use Permit' as required by UCC §5703. The stated purpose of the

Community Commercial (C-1) Zoning District is to provide a broad range of commercial land use opportunities along primary transportation corridors. The C-1 district is intended to promote and provide flexibility for commercial development, including cannabis related businesses.

The Applicant has submitted all required documents including a complete application, a Security Plan, and Standard Operating Procedures in compliance with the aforementioned ordinances. In addition, the Applicant has successfully completed the Live Scan process via the Ukiah Police Department. The Project is consistent with all other requirements contained within the above applicable ordinances for Cannabis Related Businesses and a 'Dispensary Use Permit.' Furthermore, the Project is consistent with the all applicable development standards for the “C-1” Community Commercial zoning district outlined in §9083-9087 of the UCC.

Per §9262 a Site Development Permit is not required, and thus a review by the Design Review Board is not a component of this discretionary review process. This is due to the fact that the requested exterior modifications are limited to a new paint color and awning replacement, which would not significantly change the architectural character of the structure. As previously noted within this Staff Report, similar alterations to the structure were made previously without the need to obtain a Site Development Permit. While the installation of street trees is a project component, it does not comprise a substantial request as to necessitate a separate landscaping plan or analysis by the Design Review Board. Furthermore, as requested the project does not involve an addition or major alteration to the subject structure.

The proposed dispensary operation will be located in an existing building with minimal exterior changes, besides paint color. The visual character of the area will be virtually unchanged with the exception of street trees. The business frontage is oriented towards Seminary Avenue, and general public access will be restricted at the School Street entrance. The operation will result in additional traffic on local roads; however, the increase in trips would not result in a significant impact to road or intersection function, as previous businesses have utilized this commercial storefront for similar retail activities. Furthermore, the operation will offer delivery service to reduce customer trips to the storefront location, and is near a public transit stops and bicycle infrastructure to encourage alternate modes of travel.

***Noise***: Dispensaries, and retail in general, are typically not considered to be noise-generating uses because all storefront operations would occur inside the existing commercial building, and not feature aspects such as live-music, on-site consumption, or sound amplification. Proposed hours of operation for the dispensary are 9:00 am to 9:00 pm, when ambient traffic noise from Seminary Avenue and School Street would also be occurring or ending. No overnight operations are proposed. It is, therefore, reasonable to assume that the facility would operate in compliance with General Plan noise standards. No operational noise impacts are anticipated and construction tasks are limited in scope.

***Parking***: Per §9199, all existing commercial structures as of January 1, 1979, within the area defined as the City of Ukiah Parking District No. 1, shall be exempt from the required off street parking requirements prescribed in §9198. While no dedicated off-street parking is available, the immediate vicinity of the project features numerous on-street parking facilities. Upon review, the Project Site is proximate to a variety of available on-street parking, with spaces provided along Seminary Avenue and School Street in a variety of time increments. A Site Plan addressing parking availability is included with within **Attachment 3**. An image representing the Parking District No. 1 is included, below:

***Figure 4. Parking District No. 1 Boundaries***

***Signage*:** Per UCC §3227, allowed signage is calculated at one and one-half (1 ½) square feet of sign area for every ground level linear foot of parcel frontage. As this is considered a 'Corner Lot', the subject structure has an estimated frontage of one hundred and fourteen feet (114 feet), combined along Seminary Ave. and School St. Based on simple cacluations, the Applicant is allowed approximately 171 sf of signage. The applicant has not yet submitted a preliminary design, but has requested approximately 170 sf of signage. A Condition of Approval has been included to require the Applicant to obtain a Sign Permit in conformance with the 'Downtown Design Regulations'.

***Loading Zone*:** In their referral response, the Ukiah Police Department identified a concern regarding the location and procedure to load and unload the delivery vehicle. The concern is due to the lack of a secured on-site parking or loading area available to the subject property. Upon request, the Applicant has identified two (2) alternatives to address this concern, which are further detailed in **Attachment 4** and discussed below:

1) Convert an adjacent on-street parking space into a designated 'Loading Zone'
2) Demolish an existing 'Mechanical Room' attached to the rear of the subject structure to create an off-street parking space or 'Loading Zone.'

Upon review, Community Development Staff, as well as the Department of Public Works **(Attachment 5),** support the conversion of an existing on-street parking space into a designated loading zone. The creation of a loading zone will ensure a consistently available space to conduct deliveries, and limits the impacts or required alterations to existing encroachments and right-of-way behind adjacent businesses. Additionally, per the UPD, the area of Seminary Ave. and School St. do not feature significant numbers of calls for police service compared to other areas of the City.

It is noted that a handful of commercial businesses or restaurants within the downtown maintain similar loading zones, and that businesses with similar vulnerabilities conduct operations without the benefit of a designated or secured on-site parking area. In particular, there are multiple banks within commercial shopping centers of Ukiah that transport currency or valuables under similar security considerations. With the provision of a designated 'Loading Zone', which requires approval of the City Council, as well as the specific operational criteria contained and self-imposed within **Attachment 4**, the concerns identified have been minimized. The dispensary will implement a security plan which includes measures intended to facilitate public safety of the surrounding neighborhood by limiting potential for opportunistic crime at the site with noted surveillance and on-site staff.

***Cannabis Retail - Location Restrictions*:** The City of Ukiah maintains restrictions regarding the location of cannabis business, which include the following per §9174.2 and §5707:

1. **Within six hundred feet of a school;**
    a. *The nearest school is South Valley High School addressed at 429 S Dora St. As reviewed, this school is at a distance of approximately 900 ft.; Encompass Academy, which is cited in the application materials, is a beauty and cosmetology school, and not considered a sensitive use.*

2. **Within two hundred fifty feet of a youth-oriented facility (public park, church, museum, library, or licensed daycare facility);**

    a. *The nearest facility that meets the aforementioned facility types is Alex R. Thomas Plaza, a community park and facility at a distance of approximately 300 ft; no other facility, including licensed day care facilities are within 250 ft of the subject structure. Staff confirmed with the Department of Social Services Child Care Licensing Program that no residential family day-cares are within the vicinity of the Project Site. The Grace Hudson Museum campus is approximately 900 ft to the east of the Project Site. Staff also evaluated the potential of temporary events, such as Pumpkin Fest or the winter-ice skating rink, but notes those activities are similar to Alex R. Thomas Plaza in their associated setbacks.*

3. **Within any residential zoned parcel or primary land use, or any property with an underlying residential or mobile homes general plan land use designation;**

    a. *The Project Site is zoned Community Commercial (C-1). Adjacent parcels are zoned Community Commercial (C-1) or General Urban (GU). While residential development is allowed by right in these zoning districts, the underlying general land use intent is to facilitate a broad range of commercial land use opportunities. The nearest residential zoned properties are approximately 300 feet to the southeast along South Oak Street.*

4. **On a parcel having a residential unit, or on a parcel directly abutting a residentially zoned property, unless there are intervening nonresidential uses;**

    a. *The Project Site does not feature a residential unit. Additionally, a physical separation exists on all four Project Site boundaries, as the Project Site does not directly abut any residentially-zoned parcel or residential structure. While it was determined that there are residential units on the adjacent parcel (APN* 002-272-15)*, they are separated by intervening commercial businesses that include a salon and professional office. Upon review, these residential units maintain a dedicated and separated entrance along that parcel's eastern boundary. After reviewing City records, Staff was unable to determine the date or permit that established the residential units on the adjacent legal parcel.*

5. **Abutting or within two hundred fifty feet of another cannabis dispensary.**

    a. *There is no cannabis dispensary within 250 ft of the Project Site. The nearest approved cannabis dispensary is approximately 1,700 ft to the northeast; the nearest operational cannabis dispensary is approximately 4,000 ft to the southeast. Presently, there are only two operational cannabis retail facilities within the City of Ukiah.*

The project is consistent with the siting requirements above, as it is not within the restricted distances to schools, youth-oriented facilities, or other cannabis retail facilities (see Neighborhood Context Map within **Attachment 3**).

***Airport Compatibility*:** The Site is located approximately ±5,596 ft (1.06 miles) northwest of the Ukiah Municipal Airport, and is within Compatibility Zone 4 (Extended Approach/ Departure Zone). In February 2019, the City of Ukiah, with support from the County of Mendocino and the ALUC initiated a planning effort to prepare an updated compatibility plan for the Ukiah Municipal Airport, entitled the *Ukiah Municipal Airport Land Use Compatibility Plan (*UKIALUCP*).* Subsequently, the City adopted the UKIALUCP on July 21, 2021. The basic function of this airport land use compatibility plan is to promote compatibility between airports and surrounding land uses. Airport Land Use Commissions ("ALUCs") are appointed with authority under the State Aeronautics Act to adopt airport land use compatibility plans and carry out land use project review responsibilities.

Per the UKIALUCP, the request is most aligned with the 'Local Retail' land use category, which features a typical occupancy load factor of approximately 300 sf per person. Per Table 3a (Basic Compatibility Criteria), the use is considered 'Conditionally Compatible' with Zone 4, which maintains the following intensity criteria:

<u>Zone 4 'Intensity/Density' Criteria Allowances</u>

- **Max. Sitewide Avg. Intensity Allowed (people/acre):** 150 Persons per acre
- **Max. Single-Acre Intensity Allowed (people/acre):** 450 Persons per acre

As indicated within **Attachment 3**, the building area is 2,040 sq ft and the parcel size is .07 acres. For the purposes of the facilitating a building code based methodology, the request features the following occupancy groups also identified within **Attachment 3:**

- **Group M:** 834 sq ft
- **Group B-1:** 990 sq ft
- **Group S-1**: 216 sq ft

The intensity of use for the subject structure, or the number of maximum persons, is therefore estimated as follows based on the UBC standards for each occupancy group:

- **Group M**: 834 sq ft per 60 sq ft = 7 Persons Max
- **Group B-1**: 990 sq ft per 100 sq ft = 10 Persons Max
- **Group S-1**: 216 sq ft per 500 sq ft = 1 Person Max
    - Maximum Occupancy under UBC Assumptions is 7+10+1=**18 Persons Max**
        - Assume typical peak occupancy is 50%=**9 Persons**
            - 9 Persons/.07 Acres = **128 Persons per acre**, within the site-wide average intensity for the requested use.

The single acre intensity is equal to the building occupancy, as the building footprint is less than an acre. Therefore, the projected maximum single acre intensity is also **128 persons per acre**. Unless alternative data is available from surveys of similar uses, this proposal is considered compatible with Zone 4.

Additionally, the project was referred to the County of Mendocino Airport Land Use Commission (ALUC) Staff for review on November 10, 2021. On December 3, 2021, ALUC staff responded that a consistency determination was not required by the ALUC. County Staff affirmed that the requested 'Local Retail' use would be considered conditionally compatible.

***Required Findings:*** Requirements for approval of a Use Permit within the City of Ukiah are found within UCC §9262(E). Findings, specific to this project request are included in **Attachment 1** and the project is subject to Conditions of Approval contained within **Attachment 2**.

In addition to the findings required per §9262(E), the Planning Commission shall consider additional criteria to grant or deny a 'Dispensary Use Permit' per §5710, which have also been included as part of **Attachment 1.**

## ENVIRONMENTAL DOCUMENTATION

The proposed project is subject to the California Environmental Quality Act (CEQA). The project qualifies for a categorical exemption pursuant to CEQA Guidelines Article 19 Class 1, Section 15301, Existing Facilities (a) - Interior or exterior alterations.

The project involves renovations to an existing commercial structure that was historically used for commercial/retail activities. The existing footprint of the subject structure will not be altered or expanded. There are no unusual circumstances that would result in a reasonable possibility of a significant effect, and the project is determined to be consistent with the applicable general plan designation and policies, including applicable zoning designation and cannabis use regulations.

## NOTICE

Notice of the Public Hearing was provided in the following manner, in accordance with UCC §9262(C):

- Published in the Ukiah Daily Journal on February 12, 2022
- Posted on the Project site on February 12, 2022
- Posted at the Civic Center (glass case) 72 hours prior to the public hearing
- Provided to property owners within 300 feet of the project parcels, as well as Public Agencies on February 12, 2022

## RECOMMENDATION

Staff recommends Planning Commission 1) conduct a public hearing; and 2) adopt the findings and conditionally approve a Dispensary Use Permit for the project.

## ATTACHMENTS

1. Draft Findings
2. Draft Conditions of Approval
3. Project Application Materials
4. Product Intake and Dispatch Plan
5. Agency Comments

**ATTACHMENT 1**

**DRAFT FINDINGS FOR A FOR A 'DISPENSARY USE PERMIT' TO CONDUCT THE SALE AND DELIVERY OF CANNABIS FROM AN EXISTING COMMERCIAL STRUCTURE; 195 SEMINARY AVENUE, UKIAH, 95482; APN 002-272-16-00; File No. 21-6584.**

**Recommendation for the Approval of the Use Permit and Findings:** Per Ukiah City Code (UCC), a "Dispensary" is a facility, fixed or mobile, operated in accordance with State and local regulations, where cannabis and/or cannabis products are offered for retail sale. This includes establishments that deliver cannabis and/or cannabis products. The application and project description are included as **Attachment 3**. Specific project components, improvements and requests, include:

- Operation of a dispensary/retail and delivery of recreational and medicinal cannabis products within an existing 2,040 sf, one story commercial structure.
    - The existing building footprint would not be expanded, however, interior tenant improvements, are proposed;
- Installation of three street trees along School Street, and one street tree along Seminary Ave.;
- Update the exterior paint selection, including Graycloth (PPU26-09) with Moroccan Red (1301) accent as conveyed in **Attachment 3**;
- Installation of awning replacements along Seminary Avenue and School Street;
- Installation of signage, including a 4' x 8' "Local Roots" sign along Seminary Street, as well as an 8' x 17' wall-sign along School Street;
- Installation of security features such as surveillance cameras, alarms, card reader entry;
- Operating hours for Local Roots would be as follows:
    - **Monday-Friday** 9:00 a.m. to 9:00 p.m.
    - **Saturday**: 9:00 a.m. to 9:00 p.m.
    - **Sunday**: 9:00 a.m. to 9:00 p.m.
- Conversion of an on-street parking space along School Street into a designated 'Loading Zone';
- The business will be staffed with a minimum of three employees at all times.

**Use Permit Findings**

1. **The proposed land use is consistent with the provisions of the Ukiah City Code as well as the goals and policies of the City General Plan.**

   *The proposed project is consistent with the City's 1995 General Plan goals and policies related to enhancing economic growth, the regulations & standards of the Community Commercial (C-1) zoning district, and City Code as it pertains to 'Cannabis-Related Businesses' and 'Dispensary Use Permits.' The request is further supported by General Plan and Specific Plan/Ukiah Valley Area Plan (UVAP) goals that promote business development, emphasizing local ownership that retain capital and jobs within the region. With the inclusion of operational and standard conditions that address related business components, this finding can be made.*

2. **The proposed land use is compatible with surrounding land uses and shall not be detrimental to the public's health, safety and general welfare.**

   *The proposed project would be similar in use and intensity to past on-site activities, as well as adjacent land uses. The surrounding area features a mixture of commercial development*

*with ample on-street parking. Given the provision of a comprehensive security plan and odor control measures, it can be determined that the proposed land use will not be detrimental to the public's health and safety. In addition, the project has been reviewed by the following agencies to ensure compliance with the Ukiah City Code and other regulations relating to health, general welfare, and safety: Ukiah Valley Fire Authority, City of Ukiah Public Works Department, City of Ukiah Police Department, City of Ukiah Electric Utility Department, City of Ukiah Community Development-Building Division, County of Mendocino and State Department of Social Services. As requested, comments have been included as Conditions of Approval, as appropriate, thereby allowing this finding to be made.*

**Dispensary Use Permit Findings**

In addition to the findings required in §9262 (*Use Permit Procedures*) of this Code, the Planning Commission shall consider the following criteria in determining whether to grant or deny a Dispensary Use Permit.

3. **That the Dispensary Use Permit is consistent with the intent of the Compassionate Use Act of 1996, the AUMA, the MAUCRSA, and related State law, the provisions of this Chapter and the City Code, including the application submittal and operating requirements herein.**

   *The applicant has submitted all of the required information as a part of their application in accordance with all City Codes. As conditioned, the applicant will be required to operate in compliance with all State laws under a State License.*

4. **That the Dispensary location is not identified as having significant crime issues (e.g., based upon crime reporting statistics as maintained by the Police Department).**

   *The Ukiah Police Department did not indicate that crime issues are significantly higher near the subject property as compared to other areas within the City in their correspondence with City Planning Staff. Crime information related to operation of this specific project will be reviewed and analyzed during the annual renewal process for the Use Permit.*

5. **That there have not been significant numbers of calls for police service, crimes or arrests in the area or to an existing Dispensary location.**

   *The Ukiah Police Department did not indicate that crime issues are significantly higher near the subject property as compared to other areas within the City in their correspondence with City Planning Staff. Crime information related to operation of this specific project will be reviewed and analyzed during the annual renewal process for the Use Permit.*

6. **That an applicant or employee is not under twenty- one (21) years of age.**

   *The applicant has demonstrated that they are over 21 years of age by providing a copy of their driver's license. All employees require verification by the Ukiah Police Department, which stipulates that individuals must be older than 21 years of age. Per State Law* §15000.6.*,* employees or persons retained by a licensee to work within or on a licensed premises or to handle cannabis or cannabis products shall be at least 21 years of age.

7. **That all required application materials have been provided and/ or the Dispensary has operated successfully in a manner that shows it would comply with the operating requirements and standards specified in this chapter.**

*All required application materials have been submitted. The project as proposed, would be in compliance with operating requirements contained within the City Code and adopted related cannabis ordinances.*

8. **That all required application or annual renewal fees have been paid and reporting requirements have been satisfied in a timely manner**.

   *Application fees have been paid and the applicant will be required to pay renewal fees as a Condition of Approval.*

9. **That the location is not prohibited by the provisions of this chapter or any local or State law, statute, rule or regulation and no significant nuisance issues or problems are anticipated or have resulted from dispensary operations.**

   *The project site is not located within 600 feet of any school or educational facility, nor within 250 feet of another cannabis dispensary. The parcel does not abut any youth oriented facilities or schools, nor does it contain a residential land-use. The Project Site is zoned Community Commercial. All adjacent parcels are zoned Community Commercial or General Urban. While residential development is allowed by right in these zoning districts, the underlying general land use intent is to facilitate a broad range of commercial land use opportunities. A Security Plan, Standard Operating Procedures and odor control measures are included as a part of the project to ensure no significant issues will arise from the project. The project has also been reviewed by the Ukiah Police Department, Ukiah Valley Fire Authority, and other agencies to ensure public safety.*

10. **That the site plan, floor plan, and security plan have incorporated features necessary to assist in reducing potential crime-related problems and as specified in the operating requirements in section 5708 of this Code. These features may include, but are not limited to, security on site; procedure for allowing entry: openness to surveillance and control of the premises, the perimeter, and surrounding properties: reduction of opportunities for congregating and obstructing public ways and neighboring property; illumination of exterior areas; and limiting furnishings and features that encourage loitering and nuisance behavior.**

    *The project includes a Security Plan with the features listed above such as access control gates, alarms, surveillance, perimeter fencing, etc. In addition, crime prevention-related Conditions of Approval have been included on behalf of the Ukiah Police Department. The Applicant reviewed considerations and concerns of the UPD, and updated their security plan to address delivery considerations. Video surveillance and other security measures, including automatic locks, card readers, and documented safety protocols ensure the security of the subject structure and surrounding properties.*

11. **That no Dispensary use, owner, operator, permittee, agent, or employee has violated any provision of this chapter including grounds for suspension, modification or revocation of a permit.**

    *N/A, the business is not yet operational. However, once operational, this criterion will be reviewed as a part of the permit renewal process.*

12. **That all reasonable measures have been incorporated into the plan and/ or consistently taken to successfully control the establishment's patrons' conduct**

**resulting in disturbances, vandalism, crowd control inside or outside the premises, traffic control problems, marijuana use in public, or creation of a public or private nuisance, or interference with the operation of another business.**

*The project includes a Security Plan with the features listed above such as security alarms, surveillance, secured entry, etc. In addition, crime prevention-related Conditions of Approval have been included on behalf of the Ukiah Police Department.*

13. **That the dispensary would not adversely affect the health, peace or safety of persons living or working in the surrounding area, overly burden a specific neighborhood with special needs or high impact uses, or contribute to a public nuisance; or that the dispensary has resulted in repeated nuisance activities including disturbances of the peace, illegal drug activity, marijuana use in public, harassment of passersby, excessive littering, excessive loitering, illegal parking, excessive loud noises, especially late at night or early in the morning hours, lewd conduct, or police detentions or arrests.**

    *The project site is surrounded by other commercial uses. The cultivation and consumption of cannabis will not occur on-site. Furthermore, the proposed business will operate with similar hours to nearby businesses. As components of this finding rely on the operation of a dispensary to understand the impacts, the project will be further evaluated upon renewal.*

14. **That any provision of the City Code or condition imposed by a City issued permit, or any provision of any other local or State law, regulation, or order, or any condition imposed by permits issued in compliance with those laws has not been violated.**

    *N/A, the business is not yet operational. However, once operational, this criterion will be reviewed as a part of the permit renewal process.*

15. **That the applicant has not violated any local or State law, statute, rule or regulation respecting the distribution, possession, or consumption of marijuana.**

    *The applicant has successfully completed the Live Scan process through the Ukiah Police Department, demonstrating that they have not violated any laws that would disqualify them from operating the business*.

16. **That the applicant has not knowingly made a false statement of material fact or has knowingly omitted to state a material fact in the application for a permit**.

    *The applicant certifies that they have not knowingly made a false statement or omitted information from this application.*

17. **That the applicant, his or her agent or employees, or any person who is exercising managerial authority on behalf of the applicant has not been convicted of a felony, or of a misdemeanor involving moral turpitude, or has engaged in misconduct related to the qualifications, functions or duties of a permittee.**

    *See Finding Number 15. In addition, Live Scan Background Review are required for all employees as a Condition of Approval*.

18. **That the applicant has not engaged in unlawful, fraudulent, unfair, or deceptive business acts or practices.**

*The applicant certifies that they have not engaged in any unlawful, fraudulent or deceptive business practices.*

19. **That adequate parking for medical cannabis dispensaries will be provided at a rate of one space for every two hundred (200) gross square feet of retail space, office space, and similar floor areas, pursuant to section 9198(F)(1) of this Code. Furthermore, that adequate parking for Cannabis Retailers generally will be provided at a rate of one space for every two hundred fifty (250) square feet of gross, leasable space, pursuant to section 9198(B)(1) of this Code. However, if the dispensary to be operated by the applicant does not dispense cannabis to patients or eligible Adult Use patrons on site but services qualified patients and patrons through deliveries in compliance with Section 5717 of this Code, then adequate parking will be provided at a rate of one space for every four hundred (400) square feet of gross leasable space, pursuant to Section 9198(G)(3) of this Code.**

    *N/A, per §9199, all existing commercial structures as of January 1, 1979, within the area defined as the city of Ukiah Parking District No. 1, shall be exempt from the required off street parking requirements prescribed in §9198. While the building maintains no dedicated off-street parking, the immediate vicinity of the project features numerous on-street parking facilities. The Site maintains easy access to a variety of available on-street parking, with spaces provided along Seminary and School Street in a variety of time increments*

Based on the above analysis, the findings required for the 'Dispensary Use Permit' can be made.

DRAFT

**ATTACHMENT 2**

**DRAFT CONDITIONS OF APPROVAL FOR A DISPENSARY USE PERMIT TO CONDUCT THE SALE AND DELIVERY OF CANNABIS AND/OR CANNABIS PRODUCTS FROM AN EXISTING COMMERCIAL STRUCTURE LOCATED AT 195 SEMINARY AVENUE, UKIAH, 95482; APN 002-272-16-00; FILE NO. 21-6584.**

The following Conditions of Approval shall be made a permanent part of the 'Dispensary Use Permit', shall remain in force regardless of property ownership, and shall be implemented in order for this entitlement to remain valid.

*Approved Project Description*: Per Ukiah City Code (UCC), a "Dispensary" is a facility, fixed or mobile, operated in accordance with State and local regulations, where cannabis and/or cannabis products are offered for retail sale. This includes establishments that deliver cannabis and/or cannabis products. The application and project description are included as **Attachment 3**. Specific project components, improvements and requests, include:

- Operation of a dispensary/retail and delivery of recreational and medicinal cannabis products within an existing 2,040 sf, one story commercial structure.
    - The existing building footprint would not be expanded, however, interior tenant improvements, are proposed;
- Installation of three street trees along School Street, and one street tree along Seminary Ave.;
- Update the exterior paint selection, including Graycloth (PPU26-09) with Moroccan Red (1301) accent as conveyed in **Attachment 3**;
- Installation of awning replacements along Seminary Avenue and School Street;
- Installation of signage, including a 4' x 8' "Local Roots" sign along Seminary Street, as well as an 8' x 17' wall-sign along School Street;
- Installation of security features such as surveillance cameras, alarms, card reader entry;
- Operating hours for Local Roots would be as follows:
    - **Monday-Friday** 9:00 a.m. to 9:00 p.m.
    - **Saturday**: 9:00 a.m. to 9:00 p.m.
    - **Sunday**: 9:00 a.m. to 9:00 p.m.
- Conversion of an on-street parking space along School Street into a designated 'Loading Zone';
- The business will be staffed with a minimum of three employees at all times.

## CITY OF UKIAH SPECIAL CONDITIONS

1. No consumption of cannabis or cannabis-related products shall occur on-site, including adjacent sidewalks, alleys and parking areas.

2. No special events are permitted on-site. If the Applicant wishes to hold events, they must contact the Community Development Department; additional permits or approvals may be required.

3. Per Section 5704 of the UCC this Dispensary Use Permit is valid for one-year from the date of approval. Dispensary Use Permits must be renewed on an annual basis by the Zoning

Administrator following the procedure described in Section 5704 of the UCC.

4. As outlined in Article 20, Administrational and Procedures, of the Zoning Code this planning permit may be revoked through the City's revocation process if the approved project related to this permit is not being conducted in compliance with these stipulations and conditions of approval; or if the project is not established within two years of the effective date of this approval; or if the established use for which the permit was granted has ceased or has been suspended for 24 consecutive months.

5. Prior to issuance of a certificate of occupancy and commencing operations, the Applicant shall submit proof of State licensure to operate the cannabis related business to the Community Development Department.

6. Prior to issuance a certificate of occupancy or commencing operations, the Applicant and all employees shall successfully complete a Live Scan background and provide proof of such completion.

7. No persons will live on-site. If the Applicant wishes to have a live-in manager in the future, they shall consult with the Planning and Community Development Department and obtain any necessary permits.

8. The business is required to obtain a City of Ukiah business license prior to occupancy.

**CITY OF UKIAH STANDARD CONDITIONS**

9. This approval is not effective until the 10-day appeal period applicable to this Dispensary Use Permit has expired without the filing of a timely appeal. If a timely appeal is filed, the project is subject to the outcome of the appeal and shall be revised as necessary to comply with any modifications, conditions, or requirements that were imposed as part of the appeal.

10. All Conditions of Approval shall be printed on all sets of building permit project plans pertaining to any site preparation work or construction associated with the development of the retail/dispensary structure and ancillary site improvements.

11. All use, construction and the location thereof, or occupancy, shall conform to the application and to any supporting documents submitted therewith, including any maps, sketches, or plot plans accompanying the application or submitted by Applicant in support thereof.

12. Any construction shall comply with the "Standard Specifications" for such type of construction now existing or which may hereafter be promulgated by the Engineering Department of the City of Ukiah; except where higher standards are imposed by law, rule, or regulation or by action of the Planning Commission such standards shall be met.

13. Building permits shall be issued within two years after the effective date of the Use Permit or same shall be null and void.

14. In addition to any particular condition which might be imposed; any construction shall comply with all building, fire, electric, plumbing, occupancy, and structural laws, rules, regulations, and ordinances in effect at the time the Building Permit is approved and issued.

15. The Applicant shall obtain all required Sign Permits, in compliance with Division 3, Chapter

7, Signs, of the UCC.

16. The Applicant shall submit verification of all applicable permits or approvals in compliance with all local, state and federal laws to the Community Development Department prior to issuance of building permits.

**DEPARTMENT OF PUBLIC WORKS**

17. Existing sewer laterals planned to be utilized as part of this project shall be cleaned and tested, and repaired or replaced if required.

18. Standard street tree requirements include spacing approximately every 30 feet along public streets, and installation within tree-wells when feasible. Street trees shall be installed in accordance with City Standard Drawing No. 601. The species and location of the trees shall be provided to the City Engineer and planted after approval.

19. To facilitate conversion of a 'Loading Zone' along South School Street, the Applicant must submit an 'Loading Zone Request' to the City Council for review and approval.

**BUILDING DEPARTMENT CONDITIONS**

20. A permit will be required for T.I. (Tenant Improvements). Please submit plans, building permit application, and hardship form see links below. Please submit four complete plan sets, two wet stamped and signed.

21. The design and construction of all site alterations shall comply with the 2019 California Building Code, 2019 Plumbing Code, 2019 Electrical Code, 2019 California Mechanical Code, 2019 California Fire Code, 2019 California Energy Code, 2019 Title 24 California Energy Efficiency Standards, 2019 California Green Building Standards Code and City of Ukiah Ordinances and Amendments.

**UKIAH POLICE DEPARTMENT**

22. Prior to occupancy, the Permittee shall provide the Ukiah Police Department with the current name and primary and secondary telephone numbers of at least one 24-hour on-call manager to address and resolve complaints and to respond to operating problems or concerns associated with the business.

23. "Dispensary staff shall receive appropriate training for their intended duties to ensure understanding of rules and procedures regarding dispensing in compliance with State and local law, and the dispensary shall employ properly trained or use professionally hired security personnel in accordance with the conditions of its permit. All security personnel hired or contracted for by the dispensary shall comply with Business and Professions Code Division 3, Chapters 11.4 and 11.5, or as may be amended.". Duration of Use: No juvenile or person under the age of 21 shall be on the manufacturing site or operate a cannabis manufacturing business in any capacity, including, but not limited to, as a manager, staff, employee, contractor, or volunteer.

24. Security surveillance cameras shall be installed to monitor the main entrance and exterior of the premises to discourage loitering, crime, illegal or nuisance activities. Security video shall be maintained for 90 days per 5708H7.

**Table of Contents**

Local Roots, LLC Application for Dispensary Permit at 195 Seminary Ave


| Section | Contents |
|---|---|
| **I** | **Operations and Location Information** |
| I.A | Application Form |
| I.B | Written Project Description |
| I.C | Neighborhood Context Maps |
| I.D | Plan of Operations |
| I.E | Operations Diagram |
| **II** | **Applicant Information** |
| II.A | Addresses and Contact Info |
| II.B | ID Photos |
| II.C | Employment History |
| II.D | Tax History |
| II.E | Management and Employee Information |
| II.F | Criminal Background |
| **III** | **Security Information** *(Separately Attached)* |
| III.A | Security Operations and Hardware |
| III.B | Security Diagram |
| III.C | Hardware Details |
| **IV** | **Attached Plan Set** *(Separately Attached)* |
| 1 | Site Plan |
| 2 | Radius Map |
| 3 | Existing Floor Plan |
| 4 | Proposed Floor Plan |
| 5 | Store and Street Front Plan |
| 6 | Accessibility Evaluation |
| 7 | Lighting Plan |

**8. Exterior Color Selections**

**9. Odor Control and Mitigation Plan**

# I. Operations and Location Information

# I.A – Application Form

Community Development Department
Planning Division
300 Seminary Ave., Ukiah CA 95482
Email: planning@cityofukiah.com
Web: www.cityofukiah.com
Phone: (707) 463 -6268
Fax: (707) 463-6204

City of Ukiah

# Planning Permit Application

**#21-6584**

| | | | |
|---|---|---|---|
| PROJECT NAME: Local Roots Dispensary | | | |
| PROJECT ADDRESS/CROSS STREETS: 195 Seminary Ave / South School Street | | | AP NUMBER(S): 00227216 |
| APPLICANT/AUTHORIZED AGENT: Local Roots, LLC | PHONE NO: 415-328-6321 | FAX NO: | E-MAIL ADDRESS: rjmolineaux@gmail.com d.mcginty@live.com |
| APPLICANT/AUTHORIZED AGENT ADDRESS: Authorized Agent: Robert J. Molineaux | CITY: Ukiah | | STATE/ZIP: 95482 |
| PROPERTY OWNER IF OTHER THAN APPLICANT/AGENT: The Hub Co LLC | PHONE NO: 707-489-4162 415-328-6321 | FAX NO: | E-MAIL ADDRESS: rjmolineaux@gmail.com d.mcginty@live.com |
| PROPERTY OWNER ADDRESS IF OTHER THAN APPLICANT 12500 Powerhouse Rd | CITY: Potter Valley | | STATE/ZIP: CA 95469 |
| HAS YOUR PROJECT RECEIVED A PRELIMINARY REVIEW? ☒ YES ☐ NO | | | |

| | | | | | |
|---|---|---|---|---|---|
| ☐ AIRPORT LAND USE COMM. DETERMINATION REFERRAL 100.0800.611.003 | $ | ☐ REZONING – PLANNED DISTRICT 100.0800.611.001 | $ | ☐ USE PERMIT – AMENDMENT 100.0400.449.001 | $ |
| ☐ ANNEXATION 100.0800.611.001 | $ | ☐ SITE DEVELOPMENT PERMIT – AMENDMENT 100.0400.449.001 | $ | ☑ USE PERMIT – MAJOR 100.0400.449.001 | $3,000 |
| ☐ APPEAL 100.0400.449.001 | $ | ☐ SITE DEVELOPMENT PERMIT – MAJOR 100.0400.449.001 | $ | ☐ USE PERMIT – MINOR 100.0400.449.001 | $ |
| ☐ GENERAL PLAN AMENDMENT 100.0800.611.001 | $ | ☐ SITE DEVELOPMENT PERMIT – MINOR 100.0400.449.001 | $ | ☐ VARIANCE – MAJOR 100.0400.449.001 | $ |
| ☐ MURAL PERMIT 100.0400.449.001 | $ | ☐ SPECIFIC/MASTER PLAN 100.0800.611.003 | $ | ☐ VARIANCE – MINOR 100.0400.449.001 | $ |
| ☐PRE-DEVELOPMENT MEETING 100.0800.611.003 | $ | ☐ MINOR SUBDIVISION/TENTATIVE PARCEL MAP (4 OR FEWER LOTS) 100.0800.610.001 | $ | ☐ ZONING AMENDMENT MAP OR TEXT 100.0800.611.001 | $ |
| ☐ STAFF RESEARCH (MORE THAN 1 HOUR) 10023100.41153 | $ | ☐ MAJOR SUBDIVISION/TENTATIVE SUBDIVISION MAP (5 OR MORE LOTS) 100.0800.610.001 | $ | ☐ REZONING 100.0800.611.001 | $ |
| ☐ LOT LINE ADJUSTMENT OR MERGER 100.0800.610.001 | $ | ☐ OTHER | $ | ☐ OTHER | $ |

| | | | | | |
|---|---|---|---|---|---|
| COUNTY CEQA FILING FEE: CHECK PAYABLE TO MENDOCINO CO. | $ 50 | MAJOR PERMIT DEPOSIT: | $ 3,000 | FILING DATE: | 10/13/2021 |
| COUNTY CEQA (NEG DEC) FEE: CHECK PAYABLE TO MENDOCINO CO. | $ N/A | MINOR PERMIT FEE: | $ N/A | TOTAL AMOUNT PAID: $ | 3,000+ |
| COUNTY CEQA (EIR) FEE: CHECK PAYABLE TO MENDOCINO CO. | $ N/A | TOTAL FEE: | $ 3,000 | RECEIPT NUMBER: | P6584 |

**APPLICATION NUMBER(S):** 21-6584

**Recommendation:** Prior to submitting an application, discuss your project with Staff to discover what fees (sewer, water, in-lieu park fees, traffic impact fees, etc.) may be required for your project. Also, ask about street tree requirements, required sidewalk repairs, drainage issues, storm water mitigation requirements, frontage improvements, etc.

## Project Description

Please attach a written project description including summary of work (both interior and exterior for construction and operation) and/or business proposed. The purpose of the project description is to assist Staff in understanding the project. The project description will also be included in the Staff Report required to review (and ultimately approve or deny) the planning permit. Providing complete information will help expedite the project review process and in determining what additional information, if any, related to the project and required environmental review is required.

### Environmental Review and Reports

Please be aware that projects are required to comply with the California Environmental Quality Act (CEQA). Projects will be reviewed by Staff for compliance with CEQA and Staff will determine the appropriate CEQA document to prepare for the project (exemption, negative declaration, etc.). In order to make this determination, specific reports (traffic, arborist, soils, etc.) and or additional information may be required.

### Use Information

Please provide the following information related to the use of the site and building:

| Description of Building & Site | | | |
|---|---|---|---|
| **Parcel Size:** 0.07 Acres | **Building Size:** 2,120 | | **Number of Floors:** 1 |
| **Use of Building** (check all that apply) | **Description** | **Square Footage** | **Number of Units/Suites** |
| ☐ **Office (business/professional)** | Management Office Area | 417 | Part of 1 |
| ☐ **Office (medical/dental)** | | | |
| ☐ **Retail** | Cannabis Dispensary Floor | 626.56 | Part of 1 |
| ☐ **Light Industrial** | | | |
| ☐ **Residential** | | | |
| ☐ **Other:** Storage | Secured Storage of Cannabis | 178.8 | Part of 1 |

| Operating Characteristics | | | |
|---|---|---|---|
| **Days and Hours of Operation:** 9:00AM to 9:00PM M-F | | | |
| **Number of Shifts:** 2 | **Days and Hours of Shifts:** Morning/Day Shift and Afternoon/Evening Shift -Staff Changeover between 3 and 5PM. | | |
| **Number of Employees/Shift:** 4-6 Employees at all times. | | | |
| **Loading Facilities:** ☒ Yes ☐ No | **Type/Vehicle Size:** Van or Pickup Truck | | |
| **Deliveries:** ☒ Yes ☐ No | **Type:** Retail Deliveries | **Number** (day/week/month): 10/70/280 | **Time(s) of Day:** 10AM to 9PM |
| **Outdoor areas associated with use?** (check all that apply) ☐ Yes ☒ No | **Sales area:** ☒ Yes ☐ No Square Footage: 626.5 | **Unloading of deliveries:** ☒ Yes ☐ No Square Footage: 179 | **Storage:** ☒ Yes ☐ No Square Footage: 73 |
| **Noise Generating Use?** ☐ Yes ☒ No | | **Description:** | |

| To Be Completed by Staff | | |
|---|---|---|
| **General Plan Designation:** C | **Zoning District:** C-1 | **Airport Land Use Designation:** Zone 4 |
| **City's Architectural & Historic Inventory:** ☐ YES ☒ NO | **Age of Building:** N/A | **Demolition Policy:** N/A |
| **Hillside:** ☐ YES ☒ NO | **Flood Designation FIRM Map:** N/A | **Flood Designation Floodway Map:** N/A |

| Tree Policies | |
|---|---|
| **General Plan Open Space Conservation** ☐ NO ☐ YES GOAL/POLICY #: N/A | **Community Forest Management Plan** ☒ NO ☐ YES GOAL/POLICY #: |
| **Landscaping and Streetscape Design Guidelines** ☐ NO ☐ YES GUIDELINE #: N/A | **Commercial Development Design Guidelines** ☒ NO ☐ YES GUIDELINE #: |
| **Tree Protection and Enhancement Policy** ☐ NO ☐ YES NOTES: N/A | **Tree Planting and Maintenance Policy** ☐ NO ☒ YES NOTES: |
| **UCC: Street Tree Policy, Purpose and Intent** ☐ NO ☐ YES NOTES: 4 Trees | **Other:** |

| Notes |
|---|
| |

I, Dylan McGinty, owner authorize Robert Molineaux to act on my behalf for this project and I have read and agree with all of the above. (Application must be signed by owner).

10-13-21

**PROPERTY OWNER SIGNATURE** **DATE**

I, Dylan McGinty, am the ☒ owner / ☐ authorized agent of the property for which the development is proposed. The above information and attached documents are true and accurate to the best of my knowledge.
I have read and agree with all of the above.

I hereby authorize employees of the City of Ukiah, the City's authorized agents, and persons with review or decision making authority for the project to enter upon the subject property, as necessary, to inspect the premises, post notices, and process this application.

I understand that conditions of approval may be placed on my project by the city of Ukiah and it is my responsibility to fully understand the conditions and ask questions about them before action is taken on my planning permit.

10-13-21

**☒ OWNER / ☐ AUTHORIZED AGENT** **DATE**

## INDEMNIFICATION AGREEMENT

As part of this application, the applicant agrees to defend, indemnify, and hold harmless the City of Ukiah, its agents, officers, council members, employees, boards, commissions or Council from any claim, action or proceeding brought against any of the foregoing n individuals or entities, the purpose of which is to attack, set aside, void, or annul any approval of the application or related decision, or the adoption or certification of any environmental documents or negative declaration which relates to its approval. This indemnification shall include, but is not limited to, all damages, costs, expenses, attorney fees or expert witness fees that may be awarded to the prevailing party arising out of it or in connection with the approval of the application or related decision, whether or not there is concurrent, passive, or active negligence on the part of the City, its agents, officers, council members, employees, boards, commissions of Council. If for any reason, any portion of this indemnification agreement is held to be void or unenforceable by a court of competent jurisdiction, the remainder of the agreement shall remain in full force and effect.

The City of Ukiah shall have the right to appear and defend its interests in any action through its City Attorney or outside counsel. The applicant shall not be required to reimburse the City for attorney's fees incurred by the City Attorney of the City's outside counsel if the City chooses to appear and defend itself in the litigation.

I have read and agree to all of the above.

Dylan McGinty

**☒ PROPERTY OWNER / ☐ AUTHORIZED AGENT**
(PLEASE PRINT NAME)

10-13-21

**☒ PROPERTY OWNER / ☐ AUTHORIZED AGENT** **DATE**
(SIGNATURE)

Revised 08/19/2019

# I.B – Written Project Description

## I – B. **WRITTEN PROJECT DESCRIPTION**

195 Seminary Avenue (APN: 00227216) is zoned C1 Community Commercial and is currently unoccupied but was formerly a restaurant (Mixie Salad Bar). This application proposes a Major Use Permit for Cannabis Retail at this location which would also require an "Adult-Use and Medicinal – Retailer License (Storefront)" from the Bureau of Cannabis Control. The name of the dispensary would be Local Roots and it would be operated by Local Roots, LLC. Local Roots would serve both medical and recreational customers at the proposed location.

None of the surrounding buildings or adjacent parcels are residential in use. There is no school within 600 feet or youth oriented facility within 250 feet of the facility. No expansion of the floor plan is proposed. The only proposed construction is the addition of 2 walls in a T Shape at the north entrance of building in order to create a customer waiting area and check-in office. The final layout would stay within the original footprint of the building and there are no other proposed changes to the building. This proposed construction is identified in professionally drafted Plans that follow (Section IV of this application).

The building has essentially no landscaping and as such there are no proposed changes to landscaping. The building is currently lime green, Local Roots will be requesting approval for a change in the exterior appearance of the building, by repainting it to a different color. Additionally Local Roots is proposing 2 signs, one of the South School side of the building and another on the Seminary Avenue side. The one of the Seminary Ave side would be 4 feet by 8.4 feet. The sign on the S. School side of the building will have a sign of 8 feet by 17.5 feet.

While the building has no parking lot, and no dedicated street parking the neighborhood has a high density of free street parking. A Site Plan specifically addressing the parking availability of the S. School Street and Seminary Ave intersection is contained in the Neighborhood Context Maps

Although it is difficult to precisely predict the size of our market, we estimate that the dispensary will serve between 30 and 50 individuals per day with approximately 90% of those visitors being for recreational cannabis. Therefore the dispensary anticipates it will assist between 3 and 5 medical patients a day or approximately 1,000 to 1,800 per year.

# I.C – Neighborhood Context Maps

## I – C. NEIGHBORHOOD CONTEXT MAPS

To summarize, the Ukiah Municipal Code requires Local Roots to demonstrate that the proposed location is not: (a) within 600 feet of a School; (b) is not within 250 feet of a youth oriented facility; (c) is not within or abutting a residential zone and (d) is not within 250 feet of another dispensary.

There are 3 maps attached to demonstrate the Context of the Neighborhood the proposed business would be in and an additional one included in the documents produced by our design professional.

(1) Proposed Location Relative to Thomas Plaza and nearby schools.

(2) Zoning of Surrounding Neighborhood Relative to Proposed Location

(3) Street Parking Map of the Surrounding Area

## *(1) Proposed Location Relative to Alex R. Thomas Plaza and Encompass Academy*

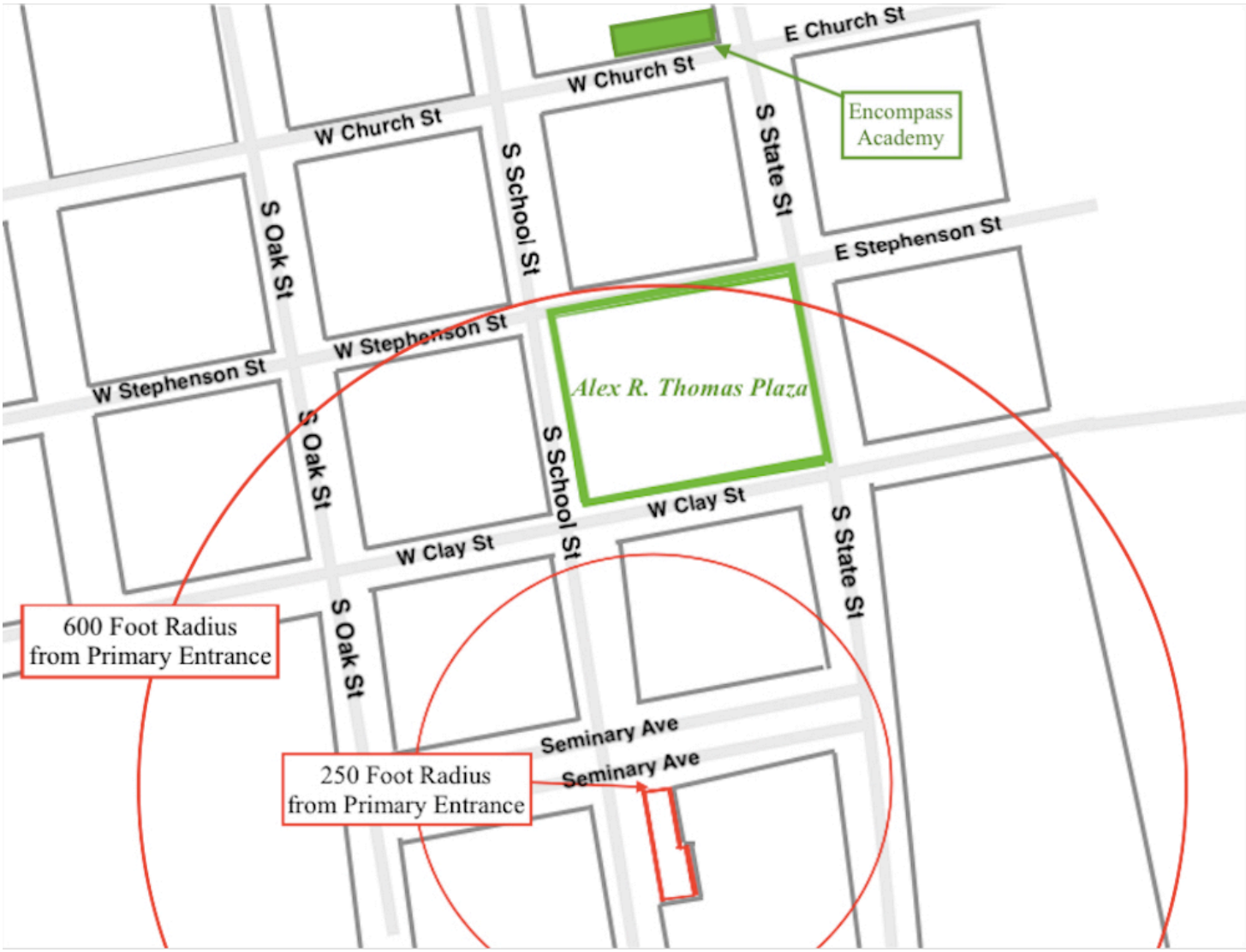


This image demonstrates that the proposed location is not within 600 feet of a school, as the closest school is Encompass Academy. South Valley High school to the West is even farther, at over 900 feet away. The closest youth oriented facility is Alex R. Thomas Plaza which is approximately 300 feet away from the primary entrance of the proposed location. The Ukiah Municipal Code requires Local Roots to demonstrate the proposed location is not within 250 feet of a youth oriented facility which the smaller radius in this image demonstrates it is not.

## *(2) Zoning of Surrounding Neighborhood Relative to Proposed Location*

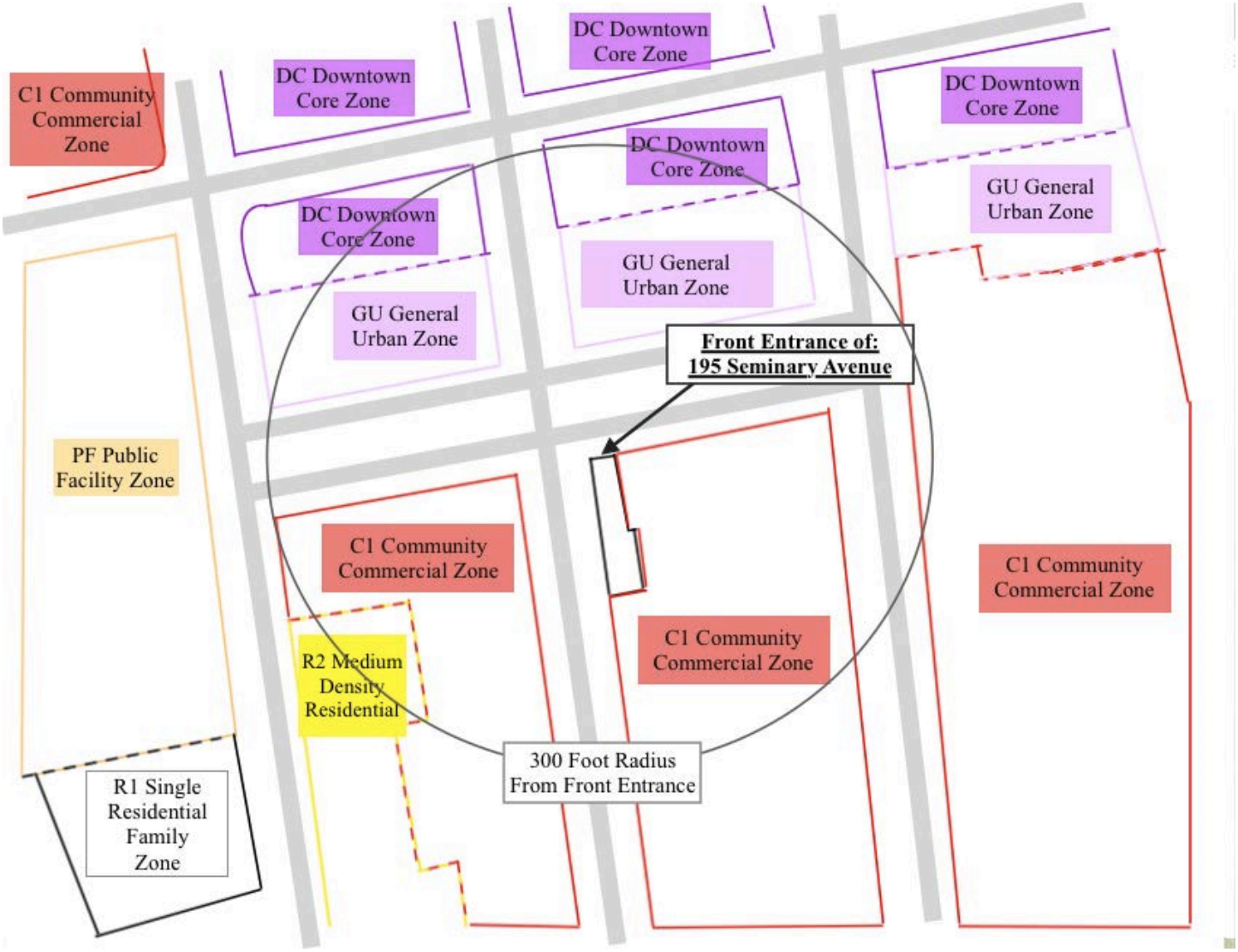


This image demonstrates that the proposed location is in an appropriate zoning district and is surrounded by parcels and city-blocks that are all also consistent with the character of a commercial district. The nearest residential district is to the south but is not adjacent or abutting and is separated by the barrier of a city street and several C1 zoned buildings. To the north is the Downtown commercial district of the city of Ukiah. The 300 foot radius in the image is only for reference.

## *(3) Street Parking Map of the Surrounding Area*

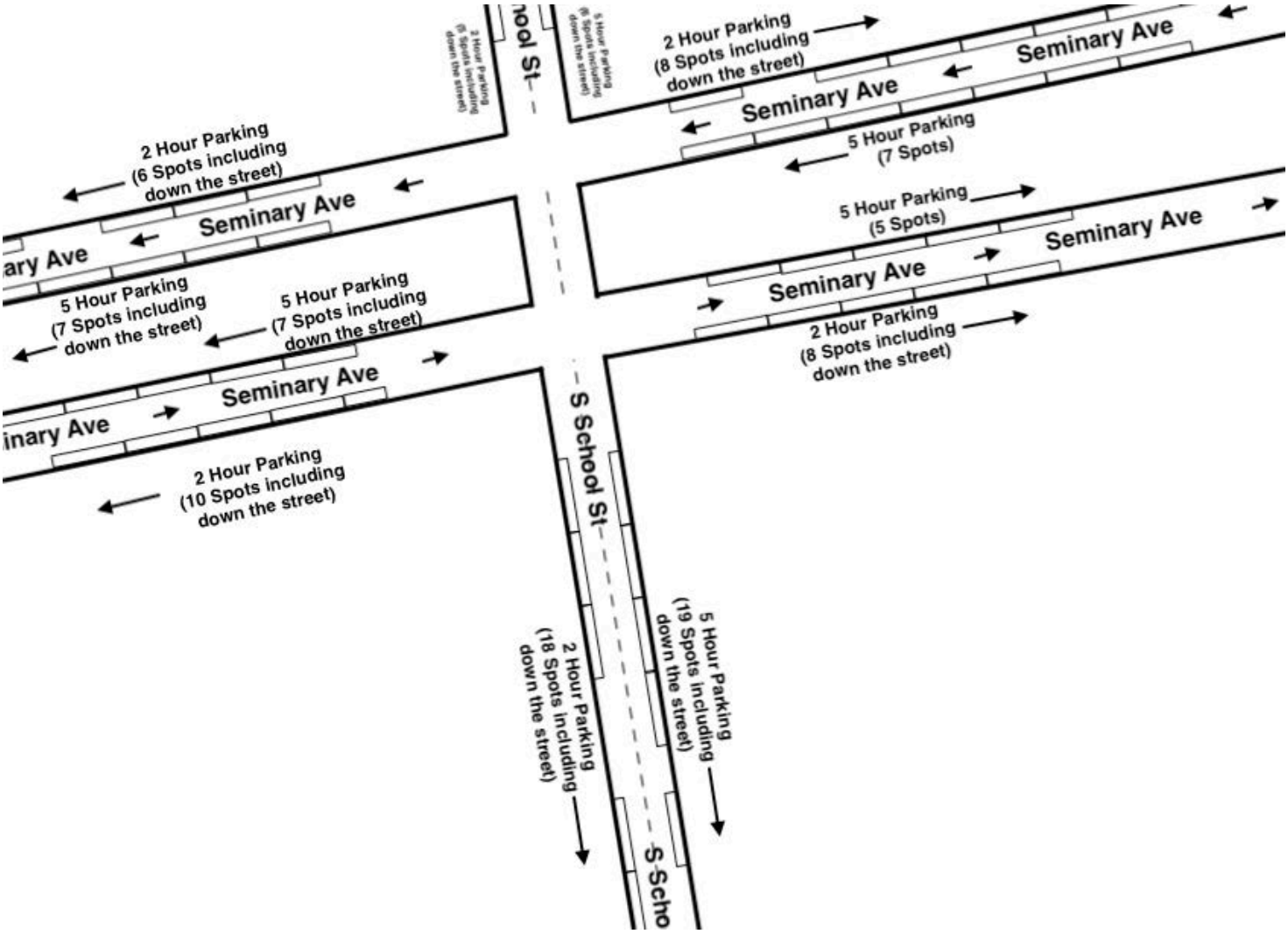


The above image demonstrates the availability of parking at the intersection of South School Street and Seminary Avenue. This intersection has one of the densest availabilities of parking in the entire city of Ukiah. The high parking availability is due in part to the 2 Traffic Islands on Seminary Ave that effectively double the amount of street parking available. If the spaces are counted on Seminary Ave from South Oak Street to South State Street there are approximately 58 parking spaces. If the spaces are counted on South School Street from Seminary Ave to West Mill Street there are approximately 37 more spaces. Therefore just within the 3 adjacent city blocks to the location there are about 95 parking spaces.

# I.D Plan of Operations (Description)

## I – D. Plan of Operations

Local Roots will operate a storefront and delivery dispensary after obtaining an "Adult-Use and Medicinal – Retailer License (Storefront)" from the Department of Cannabis Control. This state license authorizes the licensee to conduct both storefront and delivery retail services.

The businesses top priority will be compliance with state and local law. All products offered for retail at the dispensary will be purchased exclusively from state licensed commercial cannabis distributors who have sourced 100% of their product from licensed cultivators and manufacturers of cannabis products. The physical layout of the business has been designed in a way that intentionally separates the retail area and the wholesale-intake area. All wholesale orders of cannabis will enter through the back door of the facility while all customers will enter the front portion of the building and only be allowed to interact with retail-ready products.

Customers enter the dispensary from the north and come through the front door into the Lobby. They will immediately be greeted by our security staff who is in the security office behind a glass window. Staff verifies that the visitor either is 21 years of age or is 18 but has a valid medical recommendation. The age verification will be completed both visually and by computer software when the ID is scanned. Once staff has confirmed this customer can be "buzzed" in through the Door and enter the retail area. The customer will be asked to present their ID a second time during their product checkout. Customers will then leave through the same door they entered.

Delivery customers will undergo a similar set ID Double-Verification of procedures. If a delivery customer wishes to make an order they will contact the dispensary either through software or by phone and be asked to provide a digital image of their ID card. This digital image will be initially scrutinized for age and veracity. Once the driver has been dispatched to the delivery location a second verification of the identification card will be conducted to ensure that it is authentic.

# I.E Operations Diagram

Scale 1/145. Plan created with Archiplain. https://archiplain.com/

# II. A – Addresses and Contact Info

# II.A Addresses and Contact Info

## Dylan McGinty

Addresses in Last 5 Years:
*Current Address:*
10400 West Road
Redwood Valley, CA 95470

*Email:* D.mcginty@live.com
*Phone:* (707) 489-4162

## Zachary Allen

Addresses in Last 5 Years:
*Current Address:*
8361 Black Bart Trail
Ukiah, CA 95482
*Prior Addresses:*
1922 Grandview dr.
Redwood Valley95470
2013-2020

*Email:* mendo707norcal@gmail.com
*Phone:* (707) 272-9730

## Quadalupe Perea

Addresses in Last 5 Years:
*Current Address*
8882 Black Bart Trail
Ukiah, CA 95482

*Email:* Lupenfish22@hotmail.com

# II.B – ID Photos

# II.C – Employment History

# II.C Employment History

**Dylan McGinty**
Employment in Last 5 Years:
*Major Farms, LLC* (Presently Employed)

**Zachary Allen**
Employment in Last 5 Years:
*Major Farms, LLC* (Presently Employed)
*J&Z Tree and Brush Removal (*2011-Present)

**Quadalupe Perea**
Employment in Last 5 Years:
*Major Farms, LLC* (Presently Employed)
*LP Home Improvement* (2015-2017)

# II.D – Tax History

## II.D Tax History

**(Attached in separate document to maintain confidentiality)**

# II.E – Management and Employee Information

## II. E Management and Employee Information

### Employees and Staffing

At all times there will be a bare minimum of at least 3 staff members on premises at all times. The 3 main rules which need to be fulfilled are: Security Office, Retail Floor, Inventory and Management. The security office will have someone available to check in visitors at all times and follow through with the age verification procedures described in Section I.D. The retail floor will have a separate staff member to assist visitors with their purchases. If there are no visitors or customers present the staff member working at the retail counter may sometimes assist the inventory manager in the southern portion (Non-Public) portion of the building. Finally the Inventory Manager will at all times be working in the back office of the dispensary maintaining the inventory, monitoring security and managing the other staff members.

Initially the only employees who will be hired are the same individuals listed below as Managers. As the stores sales increases staff members will be added.

### Manager Information

Jacklyn Nicole Allen (D3943338, 06/10/1987 ) will be our inventory/stock manager, she will be in-charge of keeping the vault inventory up to date and stocked up, either ordering more products from other companies or arranging to have more product dropped of from our distribution. This position will also be responsible for in-taking and out taking bulk retail items and confirming metric manifests.

Monica Nicole Doster (May 21 1988 D7534858), will be our Retail Manager this position will be responsible for keeping all shelf products stocked and making sure floor inventory is stocked from the vault. Floor manager will also be responsible for every day employees, keeping them on task while on show room floor.

Operations and Management: Zack Allen (*Owner*), Quadalupe Perea (*Owner)* and Dylan McGinty (*Owner*)

Inventory Manager: Nicole Allen

Retail Manager: Monica Nicole Doster

METRC and Compliance Support: Katrina Cavender

# II.F - Criminal Background Checks

(Attached in separate document to maintain confidentiality)

# III. Security Information

**(Attached in separate document to maintain confidentiality)**

# III.A – Security Operations and Hardware

**(Attached in separate document to maintain confidentiality)**

# III. B- Security Diagram

**(Attached in separate document to maintain confidentiality)**

# III. Security Hardware Details

**(Attached in separate document to maintain confidentiality)**

# IV. Attached Plan Set Containing:

*(1) Site Plan*
*(2) Radius Map*
*(3) Existing Floor Plan*
*(4) Proposed Floor Plan*
*(5) Store and Street Front Plan*
*(6) Accessibility Evaluation*
*(7) Lighting Plan*

# GENERAL NOTES

## REGULATORY AGENCIES

1. ALL WORK SHALL CONFORM TO THE MOST CURRENT APPLICABLE CALIFORNIA CODE OF REGULATIONS ( TITLE 24 ) PART 5)-12, INCLUDING BUT NOT LIMITED TO: CALIFORNIA ADMINISTRATIVE CODE, 2019 CALIFORNIA BUILDING CODE, 2019 CALIFORNIA RESIDENTIAL CODE, 2019 CALIFORNIA ELECTRICAL CODE, 2019 CALIFORNIA MECHANICAL CODE, 2019 CALIFORNIA PLUMBING CODE, 2019 CALIFORNIA ENERGY CODE, 2019 CALIFORNIA HISTORICAL BUILDING CODE, 2019 CALIFORNIA GREEN BUILDING STANDARDS CODE, & 2019 CALIFORNIA REFERENCED STANDARDS CODE.
2. SEPARATE DRAWINGS, CALCULATIONS AND SUBMITTAL MATERIALS SHALL BE PROVIDED FOR REVIEW AND APPROVAL OF SIGNAGE.
3. IT SHALL BE THE RESPONSIBILITY OF THE CONTRACTOR, AS HOLDER OF PERMITS TO NOTIFY THE BUILDING OFFICIAL WHEN WORK IS READY FOR INSPECTION. INSPECTION REQUESTS SHALL BE IN ACCORDANCE WITH REGULATORY AGENCIES' REQUIREMENTS. INSPECTORS SHALL HAVE COMPLETE ACCESS TO ALL WORK.
4. A RECORD OF INSPECTIONS SHALL BE MAINTAINED ON THE JOB SITE IN ACCORDANCE WITH REGULATORY AGENCY REQUIREMENTS.
5. APPROVED PLANS SHALL BE KEPT IN A PLAN BOX AND SHALL NOT BE USED BY ANY WORKMEN. ALL CONSTRUCTION SETS SHALL REFLECT THE SAME INFORMATION. THE CONTRACTOR SHALL ALSO MAINTAIN IN GOOD CONDITION, ONE COMPLETE SET OF PLANS WITH ALL REVISIONS, ADDENDA, AND CHANGE ORDERS, ON THE PREMISES AT ALL TIMES WHICH ARE TO BE UNDER THE CARE OF THE JOB SUPERINTENDENT. A REPRODUCIBLE AS-BUILT SET SHALL BE PROVIDED TO THE OWNER WHEN COMPLETE.

## PREPARATION FOR CONSTRUCTION

1. IT SHALL BE THE CONTRACTOR'S RESPONSIBILITY TO COMPLETELY FAMILIARIZE HIMSELF/HERSELF WITH THESE DRAWINGS AND THE SITE CONDITIONS, AND TO VERIFY ALL DETAILS WITH THE OWNER PRIOR TO THE START OF CONSTRUCTION.
2. DO NOT SCALE DRAWINGS.
3. DIMENSIONS ARE TO FACE LINE OF STUD (F.O.S.) UNLESS OTHERWISE NOTED. WHERE REQUIRED, MINIMUM CLEAR DIMENSIONS HAVE BEEN NOTED. SEE COVER SHEET FOR GRAPHIC EXPLANATION.
4. ANY DISCREPANCY OR ERROR IN DRAWINGS SHALL BE BROUGHT TO THE ATTENTION OF THE ARCHITECT AND OWNER PRIOR TO THE COMMENCEMENT OF WORK.
5. THE DRAWINGS DO NOT ILLUSTRATE EVERY CONDITION. THE DRAWINGS INDICATE LOCATIONS, DIMENSIONS, AND TYPICAL DETAILS OF CONSTRUCTION. WORK NOT EXPRESSLY DETAILED SHALL BE OF CONSTRUCTION SIMILAR TO PARTS THAT ARE DETAILED.
6. THE CONTRACT DRAWINGS AND SPECIFICATIONS REPRESENT THE FINISHED STRUCTURE. UNLESS OTHERWISE SHOWN, THEY DO NOT INDICATE THE METHOD OF CONSTRUCTION. THE GENERAL CONTRACTOR SHALL SUPERVISE AND DIRECT THE WORK AND HE/SHE SHALL BE SOLELY RESPONSIBLE FOR ALL CONSTRUCTION MEANS, METHODS, TECHNIQUES, SEQUENCES, AND PROCEDURES. OBSERVATION VISITS TO THE SITE BY FIELD REPRESENTATIVES OF THE ARCHITECT AND HIS CONSULTANTS DO NOT INCLUDE INSPECTION OF THE PROTECTIVE MEASURES OR THE PROCEDURES FOR SUCH METHODS OF CONSTRUCTION. ANY SUPPORT SERVICES PROVIDED BY THE ARCHITECT AND HIS CONSULTANTS DURING CONSTRUCTION SHALL BE DISTINGUISHED FROM CONTINUOUS AND DETAILED INSPECTION SERVICES WHICH ARE FURNISHED BY OTHERS. THESE SUPPORT SERVICES, WHICH ARE FURNISHED BY THE ARCHITECT AND HIS CONSULTANTS, WHETHER OF MATERIAL OR WORK AND WHETHER PERFORMED PRIOR TO, DURING, OR AFTER COMPLETION OF CONSTRUCTION, ARE PERFORMED SOLELY FOR THE PURPOSE OF ASSISTING IN QUALITY CONTROL AND IN ACHIEVING CONFORMANCE WITH CONTRACT DRAWINGS AND SPECIFICATIONS, BUT THEY DO NOT GUARANTEE CONTRACTOR'S PERFORMANCE AND SHALL NOT BE CONSTRUED AS SUPERVISION OF CONSTRUCTION.
7. THE ARCHITECT AND OWNER WILL NOT BE RESPONSIBLE FOR AMBIGUITIES AND OMISSIONS NOT BROUGHT TO THEIR ATTENTION.
8. BY SUBMITTING A BID, THE BIDDER AGREES AND WARRANTS THAT HE/SHE HAS EXAMINED THE DRAWINGS AND FOUND THAT THEY ARE ADEQUATE FOR COMPLETION OF THE PROJECT.
9. THE CONTRACTOR SHALL BE RESPONSIBLE FOR VERIFYING FIELD MEASUREMENTS BEFORE ORDERING MATERIALS AND PREFABRICATED ITEMS. ANY NECESSARY ADJUSTMENTS BETWEEN FIELD MEASUREMENTS AND DRAWINGS SHALL BE MADE IN ACCORDANCE WITH THE DECISION OF THE ARCHITECT AND/OR OWNER.
10. CONTRACTOR'S SCOPE OF WORK: ALL LABOR, MATERIALS, FABRICATION, EQUIPMENT, APPLIANCES, APPURTENANCES, TRANSPORTATION AND SERVICES REQUIRED FOR CONSTRUCTION, ERECTION, AND INSTALLATION OF ALL OF THE VARIOUS WORK INDICATED ON THE DRAWINGS AND/OR SPECIFIED UNDER EACH OF THE SPECIFICATION SECTIONS; ANY SITE DEMOLITION AND REMOVAL OF ANY MATERIAL, RUBBISH, OR DEBRIS ABOVE OR BELOW GRADE; ALL EARTHWORK AND FOUNDATION WORK.
11. THE CONTRACTOR SHALL BE RESPONSIBLE FOR LOCATING THE WORK IN ACCORDANCE WITH THE PROPERTY LINES AND ELEVATIONS PER THE SURVEY DRAWING AND GRADING/DRAINAGE PLAN.
12. CONTRACTOR TO COORDINATE ALL PLUMBING, GAS, ELECTRICAL, SPRINKLER, AND HVAC SYSTEMS FOR COMPATIBILITY WITH THE PROPOSED DESIGN PRIOR TO COMMENCEMENT OF CONSTRUCTION.
13. CONTRACTOR TO VERIFY ALL ELECTRICAL, PLUMBING, AND HVAC REQUIREMENTS FOR EXISTING OR SPECIFIED EQUIPMENT PRIOR TO CONSTRUCTION. ADDITIONALLY, CONTRACTOR SHALL CONFIRM EQUIPMENT LIST WITH THE ARCHITECT BEFORE COMMENCEMENT OF WORK.
14. RUFF + ASSOCIATES, INC. SHALL HAVE NO RESPONSIBILITY FOR THE DISCOVERY, HANDLING, PRESENCE, DISPOSAL, REMOVAL OF, OR EXPOSURE OF PERSONS TO HAZARDOUS MATERIALS IN ANY FORM AT THE PROJECT SITE, INCLUDING BUT NOT LIMITED TO ASBESTOS, ASBESTOS PRODUCTS, POLYCHLORINATED BIPHENYL (PCB), OR OTHER TOXIC SUBSTANCES. SUCH WORK, IF REQUIRED, SHALL BE COMPLETED UNDER SEPARATE CONTRACT.

# GENERAL NOTES

## QUALITY AND JOB MANAGEMENT

1. THE CONTRACTOR SHALL CONSULT THE INTERIOR FINISH SCHEDULE FOR ALL INTERIOR MATERIALS COORDINATION, CABINETS, ETC.
2. ALL ITEMS OF MILLWORK SHALL BE CAREFULLY ERECTED WITH TIGHT-FITTING JOINTS, CAREFULLY CUT AND SECURED. EXPOSED NAILS OR SCREWS SHALL BE SET IN PUTTY. BACK PRIME ALL MILLWORK BEFORE INSTALLATION AND PROTECT AGAINST DAMPNESS. MOLDS AND FACES SHALL BE CLEAN CUT AND TRUE PATTERN. ALL WORK SHALL BE THOROUGHLY CLEANED AND SANDED TO RECEIVE THE FINISH. SHARP CORNERS OF SHALL MEMBERS OF FINISH WOODWORK SHALL BE SLIGHTLY ROUNDED.
3. ALL FRAMING SHALL BE INSTALLED CLOSELY FITTED, ACCURATELY SET IN PLACE TO THE REQUIRED LINES AND LEVELS, AND SHALL BE OF THE DIMENSIONS SHOWN ON DRAWINGS. DO NOT IMPAIR STRUCTURAL MEMBERS BY CUTTING OR DRILLING - CONSULT ARCHITECT.
4. ALL PROPRIETARY PRODUCTS NOTED ON THE DRAWINGS SHALL BE INSTALLED IN ACCORDANCE WITH THE MANUFACTURER'S RECOMMENDATIONS AND HAVE PRIOR APPROVAL FROM THE LOCAL GOVERNING AGENCIES.
5. THE ARCHITECT AND THE ENGINEER WILL MAKE PERIODIC VISITS TO THE JOB SITE TO OBSERVE THE PROGRESS OF THE WORK. THE ARCHITECT AND ENGINEER SHALL NOT HAVE CONTROL OR CHARGE OF, AND SHALL NOT BE RESPONSIBLE FOR, CONSTRUCTION MEANS, METHODS, TECHNIQUES, SEQUENCES OR PROCEDURES, FOR SAFETY PRECAUTIONS AND PROGRAMS IN CONNECTION WITH THE WORK, FOR ACTS OR OMISSIONS OF THE CONTRACTOR, SUBCONTRACTORS OR ANY PERSONS PERFORMING ANY OF THE WORK OR FOR FAILURE OF ANY OF THOSE PARTIES TO CARRY OUT THE WORK IN CONFORMANCE WITH CONTRACT DOCUMENTS.
6. CUTTING & PATCHING: AVOID DAMAGING ADJACENT EXISTING WORK. REPAIR OR REPLACE AT NO COST TO OWNER ANY DAMAGE CAUSED BY CONSTRUCTION.
7. TEMPORARY SHORING: STRUCTURALLY BRACE AND SUPPORT ALL MATERIALS REQUIRING THE SAME FOR THE WORK TO OCCUR SAFELY AND IN COMPLIANCE WITH JURISDICTIONAL REGULATIONS.

## CHANGES TO WORK & SUBMITTALS

1. CHANGES OR MODIFICATIONS TO THE WORK DURING CONSTRUCTION SHALL BE RECORDED WITH THE APPROPRIATE REGULATORY AGENCIES, AND APPROVALS FROM SUCH AGENCIES SHALL BE OBTAINED PRIOR TO MAKING SUCH CHANGES. REGULATORY AGENCIES SHALL BE NOTIFIED BY THE CONTRACTOR OF ALL SUCH CONSTRUCTION CONTRACT CHANGES AFTER PERMITS ARE ISSUED.
2. THE ARCHITECT SHALL BE INFORMED, IN WRITING, OF ALL CHANGES OR SUBSTITUTIONS MADE TO THESE PLANS AND SPECIFICATIONS. THE ARCHITECT SHALL HAVE NO IMPLIED OR ASSUMED RESPONSIBILITY FOR CHANGES IMPLEMENTED WITHOUT THE ARCHITECT'S PRIOR APPROVAL.
3. SHOP DRAWINGS: SHOP DRAWINGS ARE AN AID FOR FIELD PLACEMENT AND ARE SUPERSEDED BY THE ARCHITECTURAL DRAWINGS. IT SHALL BE THE RESPONSIBILITY OF THE GENERAL CONTRACTOR TO MAKE CERTAIN THAT ALL CONSTRUCTION IS IN FULL AGREEMENT WITH THE LATEST ARCHITECTURAL DRAWINGS. THE CONTRACTOR SHALL SUPPLY THE ARCHITECT/ENGINEER WITH A MINIMUM OF TWO (2) COPIES OF CHECKED SHOP DRAWINGS BEARING THE CONTRACTOR'S STAMP OF APPROVAL AND SIGNATURE, A MINIMUM OF THREE (3) WEEKS PRIOR TO FABRICATION. THE REVIEW OF SHOP DRAWINGS AND SPECIFICATIONS BY THE ARCHITECT/ENGINEER IS ONLY FOR GENERAL COMPLIANCE WITH THE ARCHITECTURAL AND/OR STRUCTURAL DRAWINGS AND SPECIFICATIONS. THIS REVIEW DOES NOT GUARANTEE IN ANY WAY THAT THE SHOP DRAWINGS ARE CORRECT, COMPLETE, NOR DOES IT INFER THAT THEY SUPERSEDE THE ARCHITECTURAL AND/OR STRUCTURAL DRAWINGS.
4. SUBSTITUTIONS: PROPRIETARY ARTICLES MAY BE SUBSTITUTED IF, IN THE OPINION OF THE ARCHITECT AND OWNER, THE MATERIAL OR ARTICLE IS EQUAL TO THAT SPECIFIED. REQUEST FOR SUBSTITUTIONS SHALL NOT DELAY WORK.CONTRACTOR SHALL COORDINATE ACCEPTED SUBSTITUTIONS WITHOUT ADDITIONAL COST TO OWNER. ALL SUBSTITUTIONS MUST HAVE WRITTEN PERMISSION. COLOR SAMPLES OF ALL MATERIALS THAT AFFECT THE AESTHETICS OF THE DESIGN MUST BE SUBMITTED. WHEN A MANUFACTURED PRODUCT IS NOT SPECIFIED, CONTRACTOR WILL UTILIZE THE HIGHEST QUALITY PRODUCT AVAILABLE ON THE MARKET IN THE MIDDLE PRICE RANGE. CONTRACTOR SHALL ON NO ACCOUNT USE LOWER-END PRODUCTS AT THE BOTTOM PRICE RANGE WHEN BETTER QUALITY PRODUCT IN THE MIDDLE PRICE RANGE EXISTS.
5. ONLY DRAWINGS, SPECIFICATIONS, ADDENDA AND CHANGE ORDERS BEARING APPROVAL OF OWNER SHALL BE USED IN THE EXECUTION OF WORK PERMITTED ON JOB SITE.
6. ADDENDA WILL BE ISSUED DURING BIDDING TO CLARIFY DRAWINGS (AND SPECIFICATIONS) AS REQUIRED. THESE WILL BECOME A PART OF THE CONTRACT - CONSULT ARCHITECT.
7. THERE SHALL BE NO DEVIATIONS WHATSOEVER FROM THE CONTRACT DOCUMENTS WITHOUT THE ARCHITECT'S WRITTEN APPROVAL THEREOF. THE CONTRACTOR AGREES TO DEFEND, INDEMNIFY AND HOLD THE ARCHITECT HARMLESS FROM ANY CLAIMS ARISING AS A RESULT OF UNAPPROVED CHANGES.

## COMPLETION

1. ALL WORK SHALL BE CLEAN AND READY FOR USE UPON COMPLETION. EXPOSED AND SEMI-EXPOSED SURFACES BE DUSTED, MOPPED, WASHED, WIPED AND BUFFED AS NECESSARY TO LEAVE WORK IN A NEW, CLEAN, IMMACULATE CONDITION.
2. CONTRACTOR IS RESPONSIBLE FOR PROVIDING OWNER(S) WITH RECORD CONSTRUCTION/AS-BUILT SET OF DRAWINGS AND ALL WARRANTIES FOR PRODUCTS USED AFTER COMPLETION OF PROJECT.

# SYMBOLS AND ABBREVIATIONS

ABBREVIATION TERM:

| | |
|---|---|
| & | AND |
| L | ANGLE |
| @ | AT |
| A.B. | ANCHOR BOLTS |
| ABV. | ABOVE |
| A.C. | AIR CONDITIONING |
| A.C.T. | ACOUSTICAL CEILING TILE |
| ACOUS. | ACOUSTIC |
| ADJ. | ADJUSTABLE OR ADJACENT |
| A.F.FL. | ABOVE FINISHED FLOOR |
| AL. | ALUMINUM |
| ALT. | ALTERNATE |
| A.P. | ACCESS PANEL |
| APPL. | APPLIANCE |
| APPROX. | APPROXIMATELY |
| ARCH. | ARCHITECT |
| BD. | BOARD |
| BLDG. | BUILDING |
| BLKG. | BLOCKING |
| BM. | BEAM |
| B.N. | BOUNDARY NAILING |
| BOT. | BOTTOM |
| C.G. | CORNER GUARD |
| C.J. | CONTROL JOINT |
| C.L. | CENTER LINE |
| CLG. | CEILING |
| CLO. | CLOSET |
| CLR. | CLEAR |
| C.M.U. | CONCRETE MASONRY UNIT |
| CNTR. | COUNTER |
| COL. | COLUMN |
| CONC. | CONCRETE |
| CONST. | CONSTRUCTION |
| CONT. | CONTINUOUS |
| CPT. | CARPET |
| CTR. | CENTER |
| CTSK. | COUNTERSINK |
| DBL. | DOUBLE |
| DK.F. | DRINKING FOUNTAIN |
| DIA. | DIAMETER |
| DIM. | DIMENSION |
| DISP. | DISPENSER |
| DIST. | DISTANCE |
| DN. | DOWN |
| D.F. | DOUGLAS FIR |
| DR. | DOOR |
| DS | DOWNSPOUT |
| DTL. | DETAIL |
| DWG. | DRAWING |
| (E) | EXISTING |
| EA. | EACH |
| ELEC. | ELECTRICAL |
| ELEV. | ELEVATION |
| EMRGY | EMERGENCY |
| ENG. | ENGINEERED |
| E.P. | ELECTRICAL PANELBOARD |
| EQ. | EQUAL |
| EQUIP. | EQUIPMENT |
| EXC. | EXCEPT |
| EXT. | EXTERIOR |
| F.B.O. | FURNISHED BY OTHERS |
| F.D. | FLOOR DRAIN |
| FDN. | FOUNDATION |
| F.F. | FINISH TO FINISH |
| F.FL. | FINISH FLOOR |
| FIN. | FINISH |
| FLR. | FLOOR |
| FLOUR. | FLUORESCENT |
| F.O. | FACE OF |
| F.O.F. | FACE OF FINISH |
| F.O.S. | FACE OF STUD |
| F.R.P. | FIBERGLASS REINFORCED PANEL |
| F.S.E.C. | FOOD SERVICE EQUIPMENT CONTRACTOR |
| FTG. | FOOTING |
| FT. | FOOT OR FEET |
| GA. | GAUGE |
| GALV | GALVANIZED |
| G.F.R.C. | GLASS FIBER REINFORCED CONCRETE |
| G.B. | GRAB BAR |
| G.C. | GENERAL CONTRACTOR |
| GL. | GLASS |
| GND. | GROUND |
| G.S.M. | GALVANIZED SHEET METAL |
| G.W.B. | GYPSUM WALL BOARD |
| GYP. | GYPSUM |
| H.B. | HOSE BIBB |
| HDWD. | HARDWOOD |
| HDWR | HARDWARE |
| HGT. | HEIGHT |
| HORIZ. | HORIZONTAL |
| HR. | HOUR, HOURS |
| INSUL. | INSULATION |
| INT. | INTERIOR |
| JAN. | JANITOR |
| JT. | JOINT |
| K.E.C. | KITCHEN EQUIPMENT CONTRACTOR |
| KIT. | KITCHEN |
| LAV. | LAVATORY |
| MAX. | MAXIMUM |
| MECH. | MECHANICAL |
| MIN. | MINIMUM |
| MISC. | MISCELLANEOUS |
| MTD. | MOUNTED |
| MTL. | METAL |
| MTRL. | MATERIAL |
| (N) | NEW |
| N.I.C. | NOT IN CONTRACT |
| NO. | NUMBER |
| NOM. | NOMINAL |
| N.T.S. | NOT TO SCALE |
| O/ | OVER |
| O.C. | ON CENTER |
| O.DR. | OVERFLOW DRAIN |
| OH. | OVERHEAD |
| O.S.C.I. | OWNER SUPPLIED, CONTRACTOR INSTALLED |
| P.B.O. | PROVIDED BY OWNER |
| PEN | PERIMETER EDGE NAILING |
| PERP. | PERPENDICULAR |
| PL. | PLATE |
| PLAS. | PLASTER |
| PLYWD. | PLYWOOD |
| P.L. | PROPERTY LINE |
| P.LAM. | PLASTIC LAMINATE |
| P.S.F. | POUNDS PER SQUARE FOOT |
| P.S.I. | POUNDS PER SQUARE INCH |
| P.T. | PRESSURE TREATED |
| PTD. | PAINTED |
| PTN. | PARTITION |
| R. | RISER |
| R.D. | ROOF DRAIN |
| REF. | REFRIGERATOR |
| REG. | REGISTER |
| REQ. | REQUIRED |
| RM. | ROOM |
| R.O. | ROUGH OPENING |
| R.S. | ROUGH SAWN |
| RWD. | REDWOOD |
| R.W.L. | RAIN WATER LEADER |
| SCH. | SCHEDULE |
| SECT. | SECTION |
| S.F. | SQUARE FEET |
| SH. | SHELF |
| SHR. | SHOWER |
| SHTG. | SHEATHING |
| SHT. | SHEET |
| SIM. | SIMILAR |
| SPEC. | SPECIFICATION |
| SQ. | SQUARE |
| STD. | STANDARD |
| STL. | STEEL |
| S.S. | STAINLESS STEEL |
| S.S.D. | SEE STRUCTURAL DRAWINGS |
| STOR. | STORAGE |
| STR. | STRUCTURE |
| SUSP. | SUSPENDED |
| S.W. | SHEAR WALL |
| T | TREAD |
| T.B. | TOWEL BAR |
| T.B.D. | TO BE DETERMINED |
| TEMP. | TEMPERED |
| T.O.C. | TOP OF CURB |
| T&G | TONGUE AND GROOVE |
| THK. | THICK |
| T.N. | TOE NAIL |
| T.O.B. | TOP OF BEAM |
| T.O.CONC. | TOP OF CONCRETE |
| T.O.P. | TOP OF PAVEMENT |
| T.O.PL. | TOP OF PLATE |
| T.O.W. | TOP OF WALL |
| TYP. | TYPICAL |
| U.N.O. | UNLESS NOTED OTHERWISE |
| VERT. | VERTICAL |
| V.I.F. | VERIFY IN FIELD |
| WT. | WEIGHT |
| W/ | WITH |
| W.C. | WATER CLOSET |
| WD. | WOOD |
| WDW. | WINDOW |
| W.H. | WATER HEATER |
| W/I | WITHIN |
| W/O | WITHOUT |
| W.P. | WATER PROOF |
| W.R. | WATER RESISTANT |
| WSCT. | WAINSCOT |

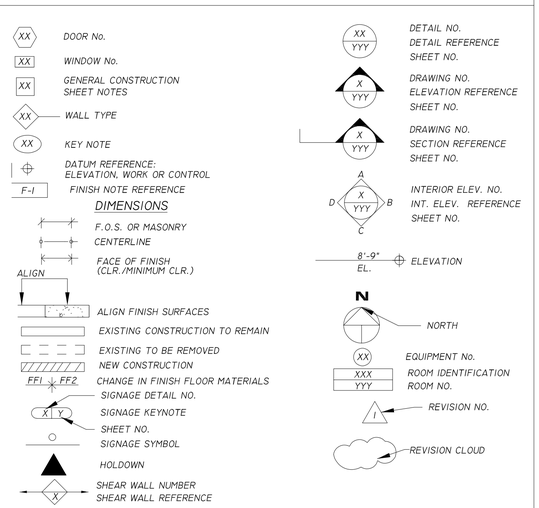


# PROJECT TEAM


**ARCHITECT**

RUFF + ASSOCIATES INC.
ARCHITECTURE & PLANNING
RICHARD P. RUFF ARCHITECT C-11736
100 WEST STANDLEY ST.,
UKIAH, CA.95482
707-472-0525 FAX 707-472-0527


# PROPOSED PARCEL DATA

LOCATION: ..... 195 SEMINARY DRIVE UKIAH, CA 95482
APN: .....002-272-16
ZONING : ..... CI
LOT SIZE: ..... .07 ACRES
BUILDING AREA: .....2040 SQ FT

**CODE ANALYSIS**

OCCUPANCY TYPE: ..... GROUP M / F-1/ S-1 SEE CODE ANALYSIS SHEET T1.2
CONSTRUCTION TYPE:..... V-B

**PROPERTY LINE CONSTRUCTION: PROPOSED (ALLOWED)**

NORTH SETBACK: ..... 0 ±
SOUTH SETBACK: ..... 0 ±
WEST SIDE SETBACK..... 0'±
EAST SIDE SETBACK: ..... 0'±

**SITE SUPPORT DATA**

FIRE DISTRICT ..... UKIAH FIRE PROTECTION DISTRICT
SEWER ..... UKIAH SEWER
WATER ..... UKIAH WATER
GAS ..... UKIAH GAS
ELECTRIC..... UKIAH ELECTRIC

# SCOPE OF WORK

TENANT IMPROVEMENTS CANNABIS DISPENSARY

# CODE ANALYSIS

REQUIRED SEPARATION OF OCCUPANCY - NONE

OCCUPANT FLOOR AREA ALLOWANCE

| GROUP | NAME | TOTAL SQ FT | OCCU LOAD FAC | OCCUPANTS | TOTAL |
|---|---|---|---|---|---|
| 1 | GROUP m MERCHANTILE | 834 SQ FT / | | | |
| | REDUCE BY 20% | 668 SQ FT / | 60 GROSS | 7 | 7 |
| | GROUP B-1 | 990 SQ FT / | | | |
| | REDUCE BY 20% | 990 SQ FT / | 100 GROSS | 10 | 10 |
| | GROUP S-1 WAREHOUSE | 216 SQ FT / | | | |
| | REDUCE BY 20% | 172 SQ FT / | 500 GROSS | 1 | 1 |
| | | | TOTAL OCCUPANCY LOAD | | 18 |

2 EGRESS SIZING

OCCUPANT LOAD 13 X 0.2 = .26 IN
REQUIRED 1 EGRESS DOOR 36" X 84"
PROVIDED 2 EGRESS DOORS 36" X 84"

* MAXIMUM PATH OF EGRESS TRAVEL ( FEET )
OL < 30 WITHOUT SPRINKLER SYSTEM 75 FEET

3 TABLE A PLUMBING OCCUPANT LOAD FACTOR

| | | | |
|---|---|---|---|
| M 834 | SQ FT | 934 / 200 PER OCCU | 5 |
| B-1 990 | SQ FT | 990/ 200 PER OCCU | 5 |
| S-1 524 | SQ FT | 524/5000 PER OCCU | 1 |
| | | TOTAL OCCUPANT LOAD | 11 |

4 MINIMUM PLUMBING FACILITIES TABLE 422.1 CPC

| MEN 5 | FEMALE 5 |
|---|---|
| 1 WC | 1 WC |
| 1 LAV | 1 LAV |

1 URINAL
1 MOP SINK
1 DRINKING FOUNTAIN

5 PARKING ANALYISIS ( WITHIN DISTRICT NUMBER ONE BOUNDRY )

| | | | |
|---|---|---|---|
| M | 834 SQ FT | 934 / 350 | 3 SPACES |
| B-1 | 990 SQ FT | 990 / 350 | 3 SPACES |
| S-1 | 216 SQ FT | 656 / 350 | 1 SPACES |
| | | TOTAL | 7 SPACES |

# DRAWING INDEX


ARCHITECTURAL

| | |
|---|---|
| T1.1 | PROJECT TITLE SHEET |
| T1.2 | CONSTRUCTION WASTE MANGEMENT PLAN |
| T1.3 | CAL GREEN NON-RESIDENTIAL REQUIREMENTS |
| A1 | SITE PLAN |
| A0.2 | NEIGHBORHOOD CONTEXT MAP |
| A2.0 | EXISTING FLOOR PLAN |
| A2.1 | PROPOSED FLOOR PLAN |
| A3.0 | EXISTING ELEVATIONS |
| A3.1 | PROPOSED ELEVATIONS |
| ADA1 | ADA BATHROOM REQUIREMENTS |
| E1P1 | EXISTING ELECTRICAL / PLUMBING PLAN |
| FE/SEC | FIRE EXIT / SECURITY PLAN |


# VICINITY MAP

RUFF + ASSOCIATES


RUFF + ASSOCIATES
Architecture Planning Development
100 West Standley Street, Ukiah, CA 95482
Phone: 707-472-0525 Fax: 707-472-0527
e-mail: richard@ruffarchitect.com


COPYRIGHT © BY RUFF + ASSOCIATES, ALL RIGHTS RESERVED.


CA License # C11736 – B597217

LICENSED ARCHITECT RICHARD RUFF NO. C11736 REN:11-30-21 STATE OF CALIFORNIA

| # | REVISIONS | DATE | BY |
|---|---|---|---|
| | | | |

DAVID MCGINTY
195 SEMINARY AVE
UKIAH, CA 95482
APN: 002-191-23

SHEET TITLE

TITLE SHEET

| | |
|---|---|
| DRAWN BY | PSM |
| CHECKED BY | RPR |
| DATE SUBMITTED | 9-15-2021 |
| DATE CREATED | 9-15-2021 |
| SCALE | AS NOTED |

PAGE
T1.1
SHEET 1 OF 11

# Construction Best Management Practices (BMPs)

**Construction projects are required to implement the stormwater best management practices (BMP) on this page. as they apply to your project, all year long.**

**Water Pollution Prevention Program**

**Clean Water. Healthy Community**

## Materials & Waste Management

**Non-Hazardous Materials**

Berm and cover stockpiles of sand, dirt or other construction material with tarps when rain is forecast or if not actively being used within 14 days.

Use (but don't overuse) reclaimed water for dust control.

**Hazardous Materials**

Label all hazardous materials and hazardous wastes (such as pesticides, paints, thinners, solvents, fuel, oil and antifreeze) in accordance with city, county, state and federal regulations.

Store hazardous materials and wastes in water tight containers, store in appropriate secondary containment, and cover them at the end of every work day or during wet weather or when rain is forecast.

Follow manufacturer's application instructions for hazardous materials and be careful not to use more than necessary. Do not apply chemicals outdoors when rain is forecast within 24 hours.

Arrange for appropriate disposal of all hazardous wastes.

**Waste Management**

Cover waste disposal containers securely with tarps at the end of every work day during wet weather.

Check waste disposal containers frequently for leaks and to make sure they are not overfilled. Never hose down a dumpster on the construction site.

Clean or replace portable toilets, and inspect them frequently for leaks and spills.

Dispose of all wastes and debris properly. Recycle materials and wastes that can be recycled (such as asphalt, concrete, aggregate base materials, wood, gyp board, pipe, etc.

Dispose of liquid residues from paints, thinners, solvents, glues and cleaning fluids as hazardous waste.

**Construction Entrances and Perimeter**

Establish and maintain effective perimeter controls and stabilize all construction entrances and exits to sufficiently control erosion and sediment discharges from site and tracking off site.

Sweep or vacuum and street tracking immediately and secure sediment source to prevent further tracking. Never hose down streets to clean up tracking.

**Recycling**

Non-Residental Mandatory Measure section 5.408 for construction waste management of recycling or reuse of of a minimum of 65% of non-hazardous demolition waste.
Meet a local construction & demolition waste management ordinance, whichever is more stringent.

## Equipment Management & Spill Control

**Maintenance and Parking**

Designate an area, fitted with appropriate BMPs for vehicle and equipment parking and storage.

Perform major maintenance, repair jobs and vehicle and equipment washing off site.

If refueling or vehicle maintenance must be done onsite, work in a bermed area away from storm drains and over a drip pan big enough to collect fluids. Recycle or dispose of fluids as hazardous waste.

If vehicle or equipment cleaning must be done onsite, clean with water only in a bermed area that will not allow rinse water to run into gutters, streets, storm drains or surface waters.

Do not clean vehicle or equipment onsite using soaps, solvents, degreasers, steam cleaning equipment, etc.

**Spill Prevention and Control**

Keep spill cleanup materials (rags, absorbents, etc.) available at the construction site at all times.

Inspect vehicles and equipment frequently for and repair leaks promptly. Use drip pans to catch leaks until repairs are made.

Clean up spills or leaks immediately and dispose of cleanup materials properly.

Do not hose down surfaces where fluids have spilled. Use dry cleanup methods (absorbent materials, cat litter, and /or rags).

Sweep up spilled dry materials immediately. Do not try to wash them away with water, or bury them.

Clean up spills on dirt areas by digging up and properly disposing of contaminated soil.

Report significant spills immediately. You are required by law to report all significant releases of hazardous materials, including oil. To report a spill: 1) Dial 911 or your local emergency response number, 2) Call the Governor's Office of Emergency Services Warning Center,
(800) 852-7550 (24 hours).

## Earthwork & Contaminated Soils

**Erosion Control**

Schedule grading and excavation work for dry weather only.

Stabilize all denuded areas, install and maintain temporary erosion controls (such as erosion control fabric or bonded fiber matrix) until vegetation is established.

Seed or plant vegetation for erosion control on slopes or where construction is not immediately planned.

**Sediment Control**

Protect storm drain inlets, gutters, ditches and drainage courses with appropriate BMPs, such as gravel bags, fiber rolls, berms, etc.

Prevent sediment from migrating off-site by installing and maintaining sediment controls, such as fiber rolls, silt fences or sediment basins.

Keep excavated soil on the site where it will not collect into the street.

Transfer excavated materials to dump trucks on the site, not in the street.

**Contaminated Soils**

If any of the following conditions are observed, test for contamination and contact the Regional Water Quality Control Board:

- -Unusual soil conditions, discoloration or odor
- -Abandoned underground tanks
- -Abandoned wells
- -Buried barrels, debris or trash

## Paving / Asphalt Work

Avoid paving and seal coating in wet weather, or when rain is forecast before fresh pavement will have time to cure.

Cover storm drain inlets and manholes when applying seal coat, tack coat, slurry seal, fog seal, etc.

Collect and recycle or appropriately dispose of excess abrasive gravel or sand. Do NOT sweep or wash it into gutters.

Do not use water to wash down fresh asphalt concrete pavement.

**Sawcutting & Asphalt/Concrete Removal**

Completely cover or barricade storm drain inlets when saw cutting. Use filter fabric, catch basin inlet filters or gravel bags to keep slurry out of the storm drain system.

Shovel, absorb or vacuum saw-cut slurry and dispose of all waste as soon as you are finished in one location or at the end of each work day (whichever is sooner).

If saw-cut slurry enters a catch basin, clean it up immediately.

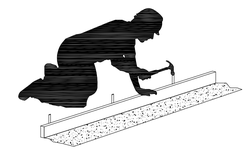

## Concrete, Grout & Mortar Application

Store concrete, grout and mortar under cover, on pallets and away from drainage areas. These materials must never reach a storm drain.

Wash out concrete equipment/trucks offsite or in a contained area, so there is no discharge into the underlying soil or onto surrounding areas. Let concrete harden and dispose of as garbage.

Collect the wash water from washing exposed aggregate concrete and remove it for appropriate disposal offsite.

**Dewatering**

Effectively manage all run-on, all runoff within the site, and all runoff that discharges from the site. Divert run-on water from offsite away from all disturbed areas or otherwise ensure compliance.

When dewatering, notify and obtain approval from the local municipality before discharging water to a street gutter or storm drain. Filtration or diversion through a basin, tank or sediment trap may be required.

In areas of known contamination, testing is required prior to reuse or discharge of groundwater. Consult with the Engineer to determine whether testing is required and how to interpret results. Contaminated groundwater must be treated or hauled off-site for proper disposal.

## Painting & Paint Removal

**Painting Cleanup**

Never clean brushes or rinse paint containers into a street, gutter, storm drain or surface waters.

For water-based paints, paint out brushes to the extent possible. Rinse to the sanitary sewer once you have gained permission from the local wastewater treatment authority. Never pour paint down a drain.

For oil-based paints, paint out brushed to the extent possible and clean with thinner or solvent in a proper container. Filter and reuse thinners and solvents. Dispose of residue and unusable thinner/solvent as hazardous waste.

**Paint Removal**

Chemical paint stripping residue and chips and dust from marine paints or paints containing lead or tributyltin must be disposed of as hazardous waste.

Paint chips and dust from non-hazardous dry stripping and sand blasting may be swept up or collected in plastic drop cloths and disposed of as trash.

**Landscape Materials**

Contain stockpiled landscaping materials by storing them under tarps when they are not actively being used.

Stack erodible landscape material on pallets. Cover or store these materials when they are not actively being used or applied.

Discontinue application of any erodible landscape material within 2 days before a forecast rain event or during wet weather.

**Storm Drain polluters may be liable for fines up to $10,000 per day!**

| # | REVISIONS | DATE | BY |
|---|---|---|---|
| | | | |

RUFF + ASSOCIATES

RUFF + ASSOCIATES
Architecture Planning Development
100 West Standley Street, Ukiah, CA 95482
Phone: 707-472-0525 Fax: 707-472-0527
e-mail: richard@rufforchitect.com

COPYRIGHT © BY RUFF + ASSOCIATES, ALL RIGHTS RESERVED.

CA License # C11736 – B597217

LICENSED ARCHITECT RICHARD RUFF NO. C11736 REN.11-30-21 STATE OF CALIFORNIA

DAVID MCGINTY
195 SEMINARY AVE
UKIAH, CA 95482
APN: 002-191-23

SHEET TITLE

*Construction Waste Management*

| | |
|---|---|
| DRAWN BY | PSM |
| CHECKED BY | RPR |
| DATE SUBMITTED | 9-15-2021 |
| DATE CREATED | 9-15-2021 |
| SCALE | AS NOTED |

PAGE T1.2

SHEET 2 OF 11

**5.410.2.3 Commissioning plan.** Prior to permit issuance a commissioning plan shall be completed to document how the project will be commissioned. The Commissioning Plan shall include the following:
1. General project information
2. Commissioning goals
3. Systems to be commissioned. Plans to test systems and components shall include:
   a. An explanation of the original design intent
   b. Equipment and systems to be tested, including the extent of tests
   c. Functions to be tested
   d. Conditions under which the test shall be performed
   e. Measurable criteria for acceptable performance
4. Commissioning team information
5. Commissioning process activities, schedules and responsibilities. Plans for the completion of of commissioning shall be included.

**5.410.2.4 Functional performance testing.** Functional performance tests shall demonstrate the correct installation and operation of each component, system and system-to-system interface in accordance with the approved plans and specifications. Functional performance testing reports shall contain information addressing each of the building components tested, the testing methods utilized, and include any readings and adjustments made.

**5.410.2.5 Documentation and training.** A systems manual and systems operations training are required. Including Occupational Safety and Health Act (OSHA) requirements in California Code of Regulations (CCR). Title 8, Section 5142, and other related regulations.

**5.410.2.5.1 Systems manual.** Documentation of the operational aspects of the building shall be completed within the systems manual and delivered to the building owner or representative. The systems manual shall include the following:

1. Site information, including facility description, history and current requirements.
2. Site contact information.
3. Basic operations and maintenance, including general site operating procedures, basic troubleshooting, recommended maintenance requirements, site events log.
4. Major systems.
5. Site equipment inventory and maintenance notes.
6. A copy of verifications required by the enforcing agency or this code.
7. Other resources and documentation if applicable.

**5.410.2.5.2 Systems operations training.** A program for training of the appropriate maintenance staff for each equipment type and/or system shall be developed in the commissioning report and shall include the following:
1. System/equipment overview (what it is, what it does and with what other systems and/or equipment it interfaces).
2. Review and demonstration of servicing/preventive maintenance.
3. Review of the information in the systems manual.
4. Review of the record drawings on the system/equipment.

**5.410.2.6 Commissioning report.** A report of commissioning process activities undertaken through the design, and construction phases of the building project shall be completed and provided to the owner or representative.

**5.410.4 Testing and adjusting.** Testing and adjusting of systems shall be required for new buildings less than 10,000 square feet or new systems to serve an addition or alteration subject to Section 303.1.

**5.410.4.1 (Reserved)**

**5.410.4.2 Systems.** Develop a written plan of procedures for testing and adjusting systems. Systems to be included for testing and adjusting shall include, as applicable to the project:
1. HVAC systems and controls.
2. Indoor and outdoor lighting and controls.
3. Water heating systems.
4. Renewable energy systems.
5. Landscape irrigation systems.
6. Water reuse systems.

**5.410.4.3 Procedures.** Perform testing and adjusting procedures in accordance with manufacturer's specifications and applicable standards on each system.

**5.410.4.3.1 HVAC balancing.** In addition to testing and adjusting, before a new space-conditioning system serving a building or space is operated for normal use, balance the system in accordance with the procedures defined by the Testing Adjusting and Balancing Bureau National Standards; the National Environmental Balancing Bureau Procedural Standards; Associated Air Balance Council National Standards or as approved by the enforcing agency.

**5.410.4.4 Reporting.** After completion of testing, adjusting and balancing, provide a final report of testing signed by the individual responsible for performing these services.

**5.410.4.5 Operation and maintenance (O & M) manual.** Provide the building owner or representative with detailed operating and maintenance instructions and copies of guaranties/warranties for each system. O & M instructions shall be consistent with OSHA requirements in CCR, Title 8, Section 5412, and other related regulations.

**5.410.4.5.1 Inspections and reports.** Include a copy of all inspection verifications and reports required by the enforcing agency.

**Division 5.5 ENVIRONMENTAL QUALITY**
**Section 5.501 General.**
**5.501.1 Scope.** The provisions of this chapter shall outline means of reducing the quantity of air contaminants that are odorous, irritating, and/or harmful to the comfort and well-being of a building's installers, occupants and neighbors.

**Section 5.502 Definitions**
**5.502.1 Definitions.** The following terms are defined in chapter 2.

**Arterial Highway.**
A-WEIGHTED SOUND LEVEL (dBA)
1 BTU/HOUR.
COMMUNITY NOISE EQUIVALENT LEVEL (CNEL).
COMPOSITE WOOD PRODUCTS.
DAY-NIGHT AVERAGE SOUND LEVEL (Ldn).
DECIBEL (Db)
ENERGY EQUIVALENT (NOISE) LEVEL (Leq).
EXPRESSWAY
FREEWAY
GLOBAL WARMING POTENTIAL (GWP).
GLOBAL WARMING POTENTIAL VALUE (GWP VALUE).
HIGH-GWP REFRIGERANT.
LONG RADIUS ELBOW.
LOW-GWP REFRIGERANT.
MERV.
MAXIMUM INCREMENTAL REACTIVITY (MIR).
PSIG.
REACTIVE ORGANIC COMPOUND (ROC).
SCHRADER ACCESS VALVES.
SHORT RADIUS ELBOW.
SUPERMARKET.
VOC.

**Section 5.503 Fireplaces.**
**5.503.1 General.** Install only a direct-vent sealed-combustion gas or sealed wood-burning fireplace, or a sealed woodstove or pellet stove, and refer to residential requirements in the California Energy Code, Title 24, Part 6, Subchapter 7, Section 150. Woodstoves, pellet stoves and fireplaces shall comply with applicable local ordinances.

**5.503.1.1 Woodstoves.** Woodstoves and pellet stoves shall comply with U.S. EPA Phase II emission limits where applicable.

**SECTION 5.504 Pollutant Control.**
**5.504.1.3 Temporary Ventilation.** The permanent HVAC system shall only be used during construction if necessary to condition the building or areas of additions or alteration within the required temperature range for material and equipment installation. If the HVAC system is used during construction, use return air filters with a Minimum Efficiency Reporting Value (MERV) of 8, based on ASHRAE 52.2-1999, or an average efficiency of 30 percent based on ASHRAE 52.1-1992. Replace all filters immediately prior to occupancy, or, if the building is occupied during alteration, at the conclusion of construction.

**5.504.3 Covering of duct opening's and protection of mechanical equipment during construction.** At the time of rough installation and during storage on the construction site until final startup of the heating, cooling and ventilating equipment, all duct and other related air distribution component openings shall be covered with tape, plastic, sheetmetal or other methods acceptable to the enforcing agency to reduce the amount of dust, water and debris which may enter the system.

**5.504.4 Finish material pollutant control.** Finish materials shall comply with Sections 5.504.4.1 through 5.504.4.4.

**Table 4.504.1 - ADHESIVE VOC LIMIT**
Less Water and Less Exempt Compounds in Grams per Liter

| ARCHITECTURAL APPLICATIONS | CURRENT VOC LIMITS |
|---|---|
| INDOOR CARPET ADHESIVES | 50 |
| CARPET PAD ADHESIVES | 50 |
| OUTDOOR CARPET ADHESIVES | 150 |
| WOOD FLOORING ADHESIVES | 100 |
| RUBBER FLOOR ADHESIVES | 60 |
| SUBFLOOR ADHESIVES | 50 |
| CERAMIC TILE ADHESIVES | 65 |
| VCT & ASPHALT TILE ADHESIVES | 50 |
| DRYWALL AND PANEL ADHESIVES | 50 |
| COVE BASE ADHESIVES | 50 |
| MULTIPURPOSE CONSTRUCTION ADHESIVES | 70 |
| STRUCTURAL GLAZING ADHESIVES | 100 |
| SINGLE-PLY ROOF MEMBRANE ADHESIVES | 250 |
| OTHER ADHESIVES NOT SPECIFICALLY LISTED | 50 |
| **SPECIALTY APPLICATIONS** | |
| PVC WELDING | 510 |
| CPVC WELDING | 490 |
| ABS WELDING | 325 |
| PLASTIC CEMENT WELDING | 250 |
| ADHESIVE PRIMER FOR PLASTIC | 550 |
| CONTACT ADHESIVE | 80 |
| SPECIAL PURPOSE CONTACT ADHESIVES | 250 |
| STRUCTURAL WOOD MEMBER ADHESIVES | 50 |
| TOP AND TRIM ADHESIVES | 140 |
| INDOOR CARPET ADHESIVES | 250 |
| **SUBSTRATE SPECIFIC ADHESIVES** | |
| METAL TO METAL | 30 |
| PLASTIC FOAMS | 50 |
| POROUS MATERIAL ( EXCEPT WOOD ) | 50 |
| WOOD | 30 |
| FIBERGLASS | 80 |

*1. IF AN ADHESIVE IS USED TO BOND DISSIMILAR SUBSTRATES TOGETHER, THE ADHESIVE WITH THE HIGHEST VOC CONTENT SHALL BE ALLOWED.*
*2. FOR ADDITIONAL INFORMATION REGARDING METHODS TO MEASURE THE VOC CONTENT SPECIFIED IN THIS TABLE, SEE SOUTH COAST AIR QUALITY MANAGEMENT DISTRICT RULE 1168. www.arb.ca.gov/DRDB/SC/CURHTML/R1168.PDF*

**5.504.4.1 Adhesives, sealants and caulks.** Adhesives, sealants and caulks used on the project shall meet the requirements of the following standards:

1. Adhesives, adhesive bonding primers adhesive primers, sealants, sealant primers and caulks shall comply with local or regional air pollution control or air quality management district rules where applicable, or SCAQMD Rule 1168 VOC limits, as shown in Tables 5.504.4.1 and 5.504.4.2. Such products also shall comply with Rule 1168 prohibition on the use of certain toxic compounds (chloroform, ethylene dichloride, methylene chloride, perchloroethylene and trichloroethylene), except for aerosol products as specified in subsection 2, below.

2. Aerosol adhesives, and smaller units sizes of adhesives, and sealant or caulking compounds (in units of product, less packaging, which do not weigh more than one pound and do not consist of more that 16 fluid ounces) shall comply with statewide VOC standards and other requirements, including prohibitions on use of certain toxic compounds, of California Code of Regulations, Title 17, commencing with Section 94507.

**Table 5.504.4.2 - SEALANT VOC LIMIT**
Less Water and Less Exempt Compounds in Grams per Liter

| SEALANTS | CURRENT VOC LIMITS |
|---|---|
| ARCHITECTURAL | 250 |
| MARINE DECK | 760 |
| NON-MEMBRANE ROOFS | 300 |
| ROADWAY | 250 |
| SINGLE-PLY ROOF MEMBRANES | 450 |
| OTHER | 420 |
| **SEALANT PRIMERS** | |
| ARCHITECTURAL | |
| NONPOROUS | 250 |
| POROUS | 760 |
| MODIFIED BITUMINOUS | 500 |
| MARINE DECK | 760 |
| OTHER | 705 |
| OTHER ADHESIVES NOT SPECIFICALLY LISTED | 50 |

NOTE: FOR ADDITIONAL INFORMATION REGAURDING METHOD TO MEASURE THE VOC CONTENT SPECIFIEDIN THESE TABLES, SEE SOUTH COAST AIR QUALITY MANAGEMENT DISTRICT RULE 1168

**5.504.4.3 Paints and Coatings.** Architectural paints and coatings shall comply with VOC limits in Table 1 of the ARB Architectural Coatings Suggested Control Measure, as shown in Table 5.504.4.3, unless more stringent local limits apply. The VOC content limit for coatings that do not meet the definitions for the specialty coatings categories listed in Table 5.504.4.3 shall be determined by classifying the coating as a Flat, Nonflat or Nonflat-High Gloss coating, based on its gloss as defined in Subsections 4.21, 4.36 and 4.37 of the 2007 California Air Resources Board, Suggested Control Measure, and the corresponding Flat, Nonflat or Nonflat-High Gloss VOC limit in Table 5.504.4.3 shall apply.

**Table 5.504.4.3 - VOC CONTENT LIMITS FOR ARCHITECTURAL COATINGS**
Grams of VOC Per Liter of Coating, Less Water and Less Exempt Compounds

| COATING CATEGORY | CURRENT VOC LIMITS |
|---|---|
| FLAT COATING | 50 |
| NONFLAT COATING | 100 |
| NONFLAT-HIGH GLOSS COATINGS | 150 |
| SPECIALTY COATINGS | |
| ALUMINUM ROOF COATING | 400 |
| BASEMANT SPECIALTY COATINGS | 400 |
| BITUMINOUS ROOF COATING | 50 |
| BITUMINOUS ROOF PRIMERS | 350 |
| CONCRETE CURING COMPOUND | 350 |
| CONCRETE / MASONRY SEALERS | 100 |
| DRIVEWAY SEALERS | 50 |
| DRY FOG COATING | 150 |
| FAUX FINISHING COATING | 350 |
| FIRE RESISTIVE COATING | 350 |
| FLOOR COATINGS | 100 |
| FORM-RELEASE COMPOUND | 250 |
| GRAPHIC ARTS COATINGS ( SIGN PAINT ) | 500 |
| HIGH TEMPERATURE COATING | 420 |
| INDUSTRIAL MAINTENENCE COATINGS | 250 |
| LOW SOLIDS COATINGS | 120 |
| MAGNESITE CEMENT COATINGS | 450 |
| MASTIC TEXTURE COATINGS | 100 |
| METALLIC PIGMENTED COATINGS | 500 |
| MULTICOLOR COATINGS | 250 |
| PRETREATMENT WASH PRIMERS | 420 |
| PRIMERS, SEALERS, AND UNDERCOATERS | 100 |
| REACTIVE PENETRATINGS SEALERS | 350 |
| RECYCLED COATINGS | 250 |
| ROOF COATINGS | 50 |
| RUST PREVENTATIVE COATINGS | 250 |
| SHELLACS | |
| CLEAR | 730 |
| OPAQUE | 550 |
| SPECIALTY PRIMERS, SEALERS, AND UNDERCOATERS | 100 |
| STAINS | 250 |
| STONE CONSOLIDANTS | 450 |
| SWIMMING POOL COATINGS | 340 |
| TRAFFIC MARKING COATINGS | 100 |
| TUB AND TILE REFINISH COATINGS | 420 |
| WATERPROOFING MEMBRANES | 250 |
| WOOD COATING | 275 |
| WOOD PRESERVATIVES | 350 |
| ZINC-RICH PRIMERS | 340 |

1. GRAMS OF VOC PER LITER OF COATING, INCLUDING WATER AND INCLUDING EXEMPT COMPOUNDS.
2. THE SPECIFIED LIMITS REMAIN IN EFFECT UNLESS REVISED LIMITS ARE LISTED IN SUBSEQUENT COLUMNS IN THE TABLE.
3. VALUES IN THIS TABLE ARE DERIVED FROM THOSE SPECIFIED BY THE CALIFORNIA AIR RESOURCES BOARD, ARCHITECTURL COATINGS SUGGESTED CONTROL MEASURE, FEBRUARY 1,2008. MORE INFORMATION IS AVAILIBLE FROM THE AIR RESOURCES BOARD

**5.504.4.3.1 Aerosol Paints and Coatings.** Aerosol paints and coatings shall meet the PWMIR Limits for ROC in Section 94522(a)(3) and other requirements, including prohibitions on use of certain toxic compounds and ozone depleting substances, in Sections 94522(c)(2) and (d)(2) of California Code of Regulations, Title 17, commencing with Section 94520; and in areas under the jurisdiction of the Bay Area Air Quality Management District additionally comply with the percent VOC by weight of product limits of Regulation 8 Rule 49.

**5.504.4.3.2 Verification.** Verification of compliance with this section shall be provided at the request of the enforcing agency. Documentation may include, but is not limited to, the following:

1. Manufacturer's product specification.
2. Field verification of on-site product containers

**5.504.4.4 Carpet Systems.** All carpet installed in the building interior shall meet at least one of the following testing and product requirements:

1. Carpet and Rug Institute's Green Label Plus Program.
2. Compliant with the VOC-emissions limits and testing requirements specified in the California Department of Public Health Standard Method for the Testing and Evaluation of Volatile Organic Chemical Emissions from Indoor Sources Using Environmental Chambers, Version 1.1, February 2010 (also known as CDPH Standard Method V1.1 or Specification 01350);
3. NSF/ANSI 140 at the Gold level or higher;
4. Scientific Certifications systems Sustainable Choice; or
5. Compliant with the California Collaborative for High Performance Schools (CA-CHPS) Criteria Interpretation for EQ 2.2 dated July 2012 and listed in the CHPS High Performance Product Database.

**5.504.4.4.1 Carpet cushion.** All carpet cushion installed in the building interior shall meet the requirements of the Carpet and Rug Institute's Green Label program.

**5.504.4.4.2 Carpet adhesive.** All carpet adhesive shall meet the requirements of Table 5.504.4.1

**5.504.4.5 Composite wood products.** Hardwood plywood, particleboard and medium density fiberboard composite wood products used on the interior or exterior of the buildings shall meet the requirements for formaldehyde as specified in ARB's Air Toxics Control Measure for (ATCM) Composite Wood (17 CCR 93120 et seq.). Those materials not exempted under the ATCM must meet the specified emission limits, as shown in Table 5.504.4.5.

**5.504.4.5.1 Early compliance. Reserved**

**5.504.5.3 Documentation.** Verification of compliance with this section shall be provided as required by the enforcing agency. Documentation shall include at least one of the following:

1. Product certification and specification.
2. Chain of custody certification.

3. Products labeled and invoiced as meeting the Composite Wood Products regulation (see CCR, Title 17, Section 93120, et seq.).
4. Exterior grade products marked as meeting the PS-1 or PS-2 standards of the Engineered Wood Association, the Australian AS/NZA 2269 or European 636 3S standards.
5. Other methods acceptable to the enforcing agency.

**Table 4.504.4.5 - FORMALDEHYDE LIMITS**
Maximum Formaldehyde Emissions in Parts per Million.

| PRODUCT | CURRENT VOC LIMITS |
|---|---|
| HARDWOOD PLYWOOD VENEER CORE | 0:05 |
| HARDWOOD PLYWOOD COMPOSITE CORE | 0:05 |
| PARTICLE BOARD | 0:09 |
| MEDIUM DENSITY FIBERBOARD | 0:11 |
| THIN MEDIUM DENSITY FIBERBOARD | 0:13 |

1.VALUES IN THIS TABLE ARE DERIVED FROM THOSE SEPIFIED BY THE CALIFORNIA AIR RESOURCES BOARD, AIR TOXICS CONTROL MEASURE FOR COMPOSITE WOOD AS TESTED IN ACCORDANCE WITH ASTME 1333-96. FOR ADDITIONAL INFORMATION, SEE CALIFORNIA CODE OF REGULATIONS, TITLE 17, SECTION 93120 THROUGH 93120,12
2. THIN, MEDIUM, DENSITY FIBERBOARD HAS A MAXIMUM THICKNESS OF 5/16 INCHES ( 8mm ).

**5.504.4.6 Resilient flooring systems.** For 80 percent of floor area receiving resilient flooring, installed resilient flooring shall meet at least one of the following:

1. Certified under the Resilient Floor Covering Institute (RFCI) FloorScore program.
2. compliant with the VOC-emissions limits and testing requirements specified in the California Department of Public Health's 2010 Standard Method for the Testing and Evaluation Chambers, Version 1.1, February 2010;
3. Compliant with the California Collaborative for High Performance Schools (CA-CHPS) Criteria Interpretation for EQ 2.2 dated July 2012 and listed in the CHPS High Performance Product Database; or
4. Compliant with CDPH criteria as certified under the Greenguard Children's Schools Program.

**5.504.6.1 Verification of compliance.** Documentation shall be provided verifying that resilient flooring materials meet the pollutant emission limits.

**5.504.5.3 Filters.** In mechanically ventilated buildings, provide regularly occupied area of the building with air filtration media for outside and return air that provides at least Minimum Efficiency Reporting Value (MERV) of 8. MERV 8 filters shall be installed prior to occupancy, and recommendations for maintenance with filters of the same value shall ve included in the operation and maintenance manual.

Exceptions: 1. An ASHRAE 10-percent to 15-percent efficiency filter shall be permitted for an HVAC unit meeting the 2013 California Energy Code having 60,000 Btu/h or less capacity per fan coil, if energy use of the air delivery system in 0.4 W/cfm or less at design air flow.

2. Existing mechanical equipment.

**5.504.5.3.1 Labeling.** Installed filters shall be clearly labeled by the manufacturer indicating the MERV rating.

**5.504.7 Environmental tobacco smoke (ETS) control.** Where outdoor areas are provided for smoking, prohibit smoking within 25 feet of building entries, outdoor air intakes and operable windows and within the building as already prohibited by other laws or regulations; or as enforced by ordinances, regulations or policies of any city, county, city and county, California Community College, campus of the California State University, or campus of the University of California, whichever are more stringent. When ordinances, regulations or policies are not in place, post signage to inform building occupants of the prohibitions.

**SECTION 5.505 INDOOR MOISTURE CONTROL**

**5.505.1 Indoor moisture control.** Buildings shall meet or exceed the provisions of California Building Code, CCR, Title 24, Part 2 Sections 1203 (Ventilation) and Chapter 14 (Exterior Walls).
For additional measures not applicable to low-rise residential occupancies, see Section 5.407.2 of this code.

**SECTION 5.506 INDOOR AIR QUALITY**

**5.506.1 Outside air delivery.** For mechanically or naturally ventilated spaces in buildings, meet the minimum requirements of Section 120.1 (Requirements For Ventilation) of the 2013 California Energy Code, or the applicable local code, whichever is more stringent, and Division 1, Chapter 4 of CCR, Title 8.

**5.506.2 Carbon dioxide ($CO_2$) monitoring.** For buildings or additions equipped with demand control ventilation, $CO_2$ sensors and ventilation controls shall be specified and installed in accordance with the requirements of the 2013 California Energy Code, Section 120(c)(4).

**SECTION 5.507 ENVIRONMENTAL COMFORT**

**5.507.4 Acoustical control.** Employ building assemblies and components with Sound Transmission Class (STC) values determined in accordance with ASTM E 90 and ASTM E 413 or Outdoor-Indoor Sound Transmissions Class (OITC) determined in accordance with ASTM E 1332, using either the prescriptive or performance method in Section 5.507.4.1 or 5.507.4.2.

**Exception:** Buildings with few or no occupants or where occupants are not likely to be affected by exterior noise, as determined by the enforcement authority, such as factories, stadiums, storage, enclosed parking structures and utility buildings.

**5.507.4.1 Exterior noise transmission, prescriptive method.** Wall and roof-ceiling assemblies exposed to the noise source making up the building or addition envelope shall meet a composite STC rating of at least 50 or a composite OITC rating of no less than 40, with exterior windows of a minimum STC of 40 or OITC of 30 in the following locations:
1. Within the 65 CNEL noise contour of an airport.
   Exceptions:
   1. $L_{dn}$ or CNEL for military airports shall be determined by the facility Air Installation Compatible Land Use Zone (AICUZ) plan.
   2. $L_{dn}$ of CNEL for other airports and heliports for which a land use plan has not been developed shall be determined by the local general plan noise element.
2. Within the 65 CNEL or $L_{dn}$ noise contour of a freeway or expressway, railroad, industrial source or fixed-guideway source as determined by the Noise Element of the General Plan.

**5.507.4.1.1 Noise exposure where noise contours are not readily available.** Buildings exposed to a noise level of 65 dB $L_{eq}$-1-hr during any hour of operation shall have building, addition or alterations exterior wall and roof-ceiling assemblies exposed to the noise source meeting a composite STC rating of at least 45 (or OITC 35), with exterior windows of a minimum STC of 40 or (OITC 30).

**5.507.4.2 Performance method.** For buildings located as defined in Section 5.507.4.1 or 5.507.4.1.1 wall and roof-ceiling assemblies exposed to the noise source making up the building or addition envelope or altered envelope shall be construction to provide an interior noise environment attributable to exterior sources that does not exceed an hourly equivalent noise level ($L_{eq}$-1Hr) of 50 dBA in occupied areas during any hour of operation.

**5.507.4.2.1 Site Features.** Exterior features such as sound walls or earth berms may beutilized as appropriate to the building, addition or alteration project to mitigate sound mitigationto the interior.

**5.507.4.2.2 Documentation of compliance.** An acoustical analysis documenting complying interior sound levels shall be prepared by personnel approved by the architect or engineer of record.

**5.507.4.3 Interior sound transmission.** Wall and floor-ceiling assemblies separating tenant spaces and tenant spaces and public places shall have an STC of at least 40.
Note: Example of assemblies and their various STC ratings may be found at the California Office of Noise Control: http:// .

**SECTION 5.508 OUTDOOR AIR QUALITY**
**5.508.1 Ozone depletion and greenhouse gas reductions.** Installations of HVAC, refrigeration and fire suppression equipment shall comply with Sections 5.508.1.1 and 5.508.1.2.

**5.508.1.1 Chlorofluorocarbons (CFCs).** Install HVAC, refrigeration and fire suppression equipment that do not contain CFCs.

**5.508.1.2 Halons.** Install HVAC, refrigeration and fire suppression equipment that do not contain Halons.

**5.508.2 Supermarket refrigerant leak reduction.** New commercial refrigeration systems shall comply with the provisions of this section when installed in retail food stores 8,000 square feet or more conditioned area, and that utilize either refrigerated display cases, or walk-in coolers or freezers connected to remote compressor units or condensing units. The leak reduction measures apply to refrigeration systems containing high -global-warming potential (high-GWP) refrigerant with a
GWP of 50 or greater. New refrigeration systems include both new facilities and the replacement of existing refrigeration systems in existing facilities.
**Exception:** Refrigeration systems containing low-global warming (low-GWP) refrigerant with a GWP value less than 150 are not subject to this section. Low-GWP refrigerants are nonozone-depleting refrigerants that include ammonia, carbon dioxide ($CO_2$), and potentially other refrigerants.

**5.508.2.1 Refrigerant piping.** Piping compliant with the California Mechanical Code shall be installed to be accessible for leak protection and repairs. Piping runs using threaded pipe, copper tubing with an outside diameter (OD) less than ¼ inch, flared tubing connections and short radius elbows shall not be used in refrigerant systems except as noted below.

**5.508.2.1.1 Threaded pipe.** Threaded connections are permitted at the compressor rack.

**5.508.2.1.2 Copper pipe.** Copper tubing with an OD less than ¼ inch may be used in systems with a refrigerant charge of 5 pounds or less.

**5.508.2.1.2.1 Anchorage.** One-fourth-inch OD tubing shall be securely clamped to a rigid base to keep vibration levels below 8 mils.

**5.508.2.1.3 Flared tubing connections.** Double-flared tubing connections may be used for pressure controls valve pilot lines and oil.
**Exception:** Single-flared tubing connections may be used with a multiring seal coated with industrial sealant suitable for use with refrigerants and tightened in accordance with manufacturer's recommendations.

**5.508.2.1.4 Elbows.** Short radius elbows are only permitted where space limitations prohibit use of long radius elbows.

**5.508.2.2 Valves.** Valves and fittings shall comply with the California Mechanical Code and as follows:

**5.508.2.2.1 Pressure relief valves.** For vessels containing high-GWP refrigerant, a rupture disc shall be installed between the outlet of the vessel and the inlet of the pressure relief valve.

**5.508.2.2.1.1 Pressure detection.** A pressure gauge, pressure transducer or other device shall be installed in the space between the rupture disc and the relief valve inlet to indicate a disc rupture or discharge of the relief valve.

**5.508.2.2.2 Access valves.** Only Schrader access valves with a brass or steel body are permitted for use.

**5.508.2.2.2.1 Valve cap.** For systems with a refrigerant charge of 5 pounds or more, valve caps shall be brass or steel and not plastic.

**5.508.2.2.2.2 Seal caps.** If designed for it the cap shall have a neoprene O-ring in place.

**5.508.2.2.2.2.1 Chain tethers.** Chain tethers to fit over the stem are required for valves designed to have seal caps.
**Exception:** Valves with seal caps that are not removed from the valve during stem operation.

**5.508.2.3 Refrigerated service cases.** Refrigerated service cases holding food products containing vinegar and salt shall have evaporator coils of corrosion-resistant material, such as stainless steel; or be coated to prevent corrosion from these substances.

**5.508.2.3.1 Coil coatings.** Consideration shall be given to the heat transfer efficiency of coil coating to maximize energy efficiency.

**5.508.2.4 Refrigerant receivers.** Refrigerant receivers with capacities greater than 200 pounds shall be fitted with a device that indicates the level of refrigerant in the receiver.

**5.508.2.5 Pressure testing.** The system shall be pressure tested during installation prior to evacuation and charging.

**5.508.2.5.1 Minimum pressure.** The system shall be charged with regulated dry nitrogen and appropriate tracer gas to bring system pressure to 300 psig minimum.

**5.508.2.5.2 Leaks.** Check the system for leaks, repair any leaks, and retest for pressure using the same gauge.

**5.508.2.5.3 Allowable pressure change.** The system shall stand, unaltered, for 24 hours with no more than a +/- one pound pressure change from 300 psig, measured with the same gauge.

**5.508.2.6 Evacuation.** The system shall be evacuated after pressure testing and prior to charging.

**5.508.2.6.1 Pressure vacuum.** Pull a system vacuum down to at least 1000 microns (+/- 50 microns), and hold for 30 minutes.

**5.508.2.6.2 Second vacuum.** Pull a second system vacuum to a minimum of 500 microns and hold for 30 minutes.

**5.508.2.6.3 Third vacuum.** Pull a third vacuum down to a minimum of 300 microns, and hold for 24 hours with a maximum drift of 100 microns over a 24 hour period.

| # | REVISIONS | DATE | BY |
|---|---|---|---|

RUFF + ASSOCIATES


RUFF + ASSOCIATES
Architecture Planning Development
100 West Standley Street, Ukiah, CA 95482
Phone: 707-472-0525 Fax: 707-472-0527
e-mail: richard@rufforchitect.com

COPYRIGHT © BY RUFF + ASSOCIATES, ALL RIGHTS RESERVED.

CA License # C11736 – B597217

LICENSED ARCHITECT RICHARD RUFF NO. C11736 REN.11-30-21 STATE OF CALIFORNIA

DAVID MCGINTY
195 SEMINARY AVE
UKIAH, CA 95482
APN: 002-191-23

SHEET TITLE
CALGREEN NON-RESIDENTIAL MANATORY MEASURES

| | |
|---|---|
| DRAWN BY | PSM |
| CHECKED BY | RPR |
| DATE SUBMITTED | 9-15-2021 |
| DATE CREATED | 9-15-2021 |
| SCALE | AS NOTED |

PAGE
T1.3
SHEET 3 OF 11

**Legend:**

PROPERTY LINE
BUILDING ENVELOPE
EDGE OF PAVEMENT
FENCE LINE
BUILDING SETBACK LINE
CONTOUR LINES

THE DISCHARGE OF POLLUTANTS TO ANY STORM DRAINAGE SYSTEM IS PROHIBITED. NO SOLID WASTE. PETROLEUM BYPRODUCTS, SOIL PARTICULATES, CONSTRUCTION WASTE MATERIALS, OR WASTEWATER GENERATED ON CONSTRUCTION SITES OR BY CONSTRUCTION ACTIVITIES SHALL BE PLACED, CONVEYED, OR DISCHARGED INTO THE STREET, GUTTEROR STORM DRAIN SYSTEM.....

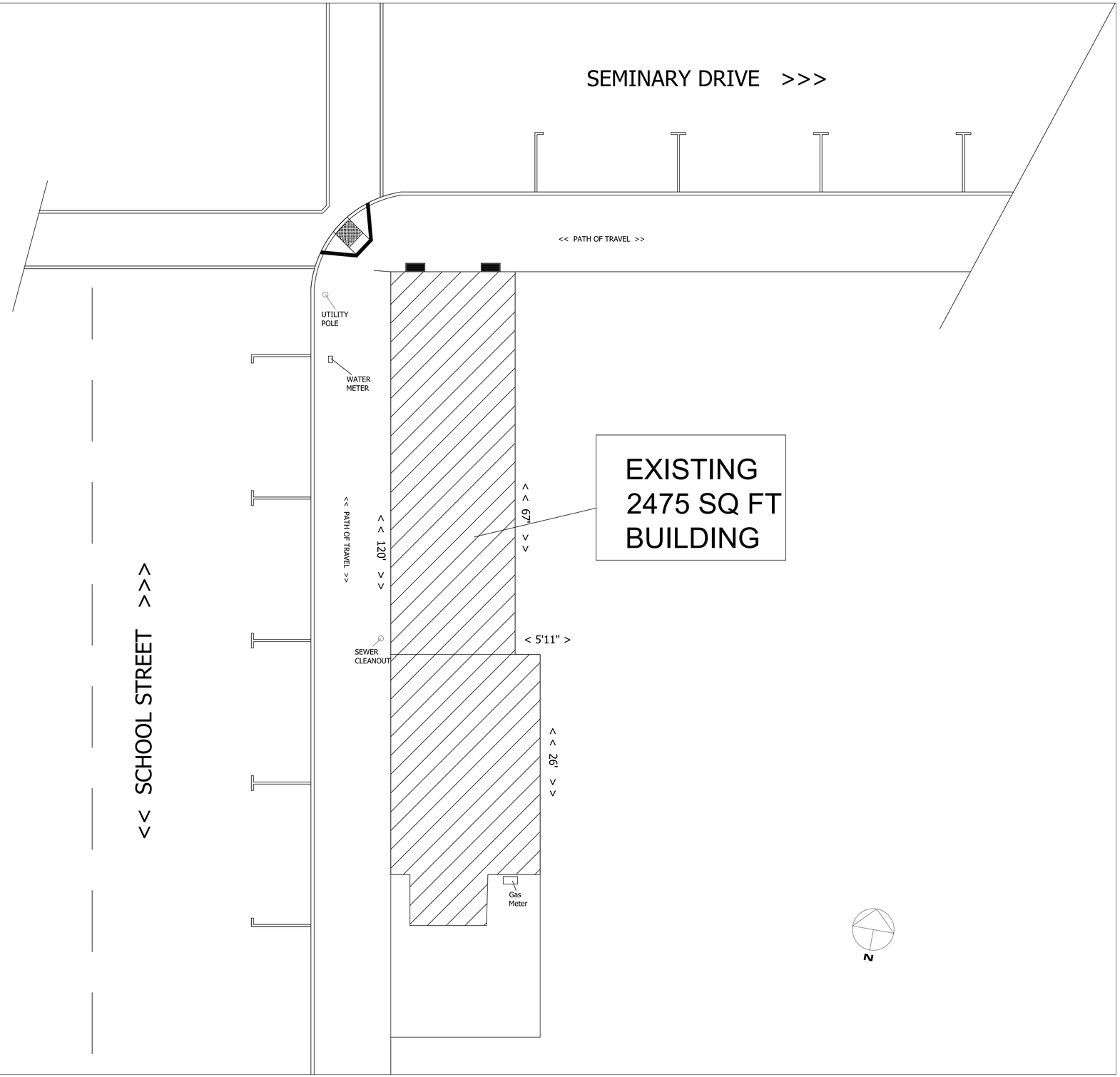


1 Site Plan
APN: 002-272-16 Scale 1/8" = 1'

| # | REVISIONS | DATE | BY |
|---|---|---|---|
| 1 | SHEET REVISIONS | 6/22/2021 | PSM |

RUFF + ASSOCIATES


RUFF + ASSOCIATES
Architecture Planning Development
100 West Standley Street, Ukiah, CA 95482
Phone: 707-472-0525 Fax: 707-472-0527
e-mail: richard@ruffarchitect.com

COPYRIGHT © BY RUFF + ASSOCIATES, ALL RIGHTS RESERVED.

CA License # C11736 – B597217

LICENSED ARCHITECT RICHARD RUFF NO. C11736 REN.11-30-21 STATE OF CALIFORNIA

DAVID MCGINTY
195 SEMINARY AVE
UKIAH, CA 95482
APN: 002-191-23

SHEET TITLE
SITE PLAN

| | |
|---|---|
| DRAWN BY | PSM |
| CHECKED BY | RPR |
| DATE SUBMITTED | 9-15-2021 |
| DATE CREATED | 9-15-2021 |
| SCALE | AS NOTED |
| PAGE | A1 |
| SHEET 4 OF 11 | |

**Neighborhood Context Map.**
An accurate straight-line drawing depicting the building and the portion thereof to be occupied by the cannabis-related business, and:

(1) The property lines of any school within six hundred feet (600') of the property line of the business for which a permit is requested..

* NO SCHOOLS WITHIN 600' .

(2) The property lines of any cannabis-related business within two hundred fifty feet (250') of the primary entrance of the business for which a permit is requested..

1 EMERALD TRIANGLE GLASSWORKS TOBACCO SHOP

(3) The property lines of any youth-oriented facility or residential zone or use within two hundred fifty feet (250') of the primary entrance of the business.

2 RESIDENTIAL AREA

3 UKIAH FELLOWSHIP STOREFRONT CHURCH

1 NEIGHBORHOOD CONTEXT MAP
APN: 002-272-16
Scale NTS

| # | REVISIONS | DATE | BY |
|---|---|---|---|
| | | | |

RUFF + ASSOCIATES

RUFF + ASSOCIATES
Architecture Planning Development
100 West Standley Street, Ukiah, CA 95482
Phone: 707-472-0525 Fax: 707-472-0527
e-mail: richard@rufforchitect.com
COPYRIGHT © BY RUFF + ASSOCIATES, ALL RIGHTS RESERVED.

CA License # C11736 – B597217

LICENSED ARCHITECT
RICHARD RUFF
NO. C11736
REN.11-30-21
STATE OF CALIFORNIA

DAVID MCGINTY
195 SEMINARY AVE
UKIAH, CA 95482
APN: 002-191-23

SHEET TITLE
NEIGHBORHOOD CONTEXT MAP

| | |
|---|---|
| DRAWN BY | PSM |
| CHECKED BY | RPR |
| DATE SUBMITTED | 9-15-2021 |
| DATE CREATED | 9-15-2021 |
| SCALE | AS NOTED |

PAGE
A0.2
SHEET 4 OF 11

## EXISTING DOOR SCHEDULE

(E) EXISTING DOOR (N) NEW DOOR LH-LEVER HANDLE LK- LOCKABLE

(E) 101 - 3'0" x 6'8" - EXTERIOR ALUMINUM GLASS TEMPERED PUSH HANDLE
(E) 102 - 3'0" x 6'8" - INTERIOR WOOD SOLID CORE LH / LC
(E) 103 - 3'0" x 6'8" - INTERIOR WOOD SOLID CORE LH / LC
(E) 104 - 3'0" x 6'8" - INTERIOR WOOD SOLID CORE LH
(E) 105 - 3'0" x 6'8" - INTERIOR WOOD SOLID CORE LH
(E) 106 - 3'0" x 6'8" - EXTERIOR METAL FIRE RATED LH / LC
(E) 107 - 3'0" x 6'8" - EXTERIOR METAL FIRE RATED LH / LC
(E) 108 - 3'0" x 6'8" - EXTERIOR METAL BARN SLIDER LC

## EXISTING WINDOW SCHEDULE

101 - 4'4", 2'4" x 6'0" - SINGLE PANE PLATE TEMPERED LOW E
102 - 4'4", 2'4" x 6'0" - SINGLE PANE PLATE TEMPERED LOW E
103 - 5'10" x 5'10" - SINGLE PANE PLATE TEMPERED LOW E
104 - 5'10" x 5'10" - SINGLE PANE PLATE TEMPERED LOW E
105 - 3'3" x 5'5" - SINGLE PANE PLATE TEMPERED LOW E
106 - 3'3" x 5'5" - SINGLE PANE PLATE TEMPERED LOW E
107 - 6'0" x 2'3" - DUAL PANE SLIDER LOW E
108 - 6'0" x 2'3" - DUAL PANE SLIDER LOW E

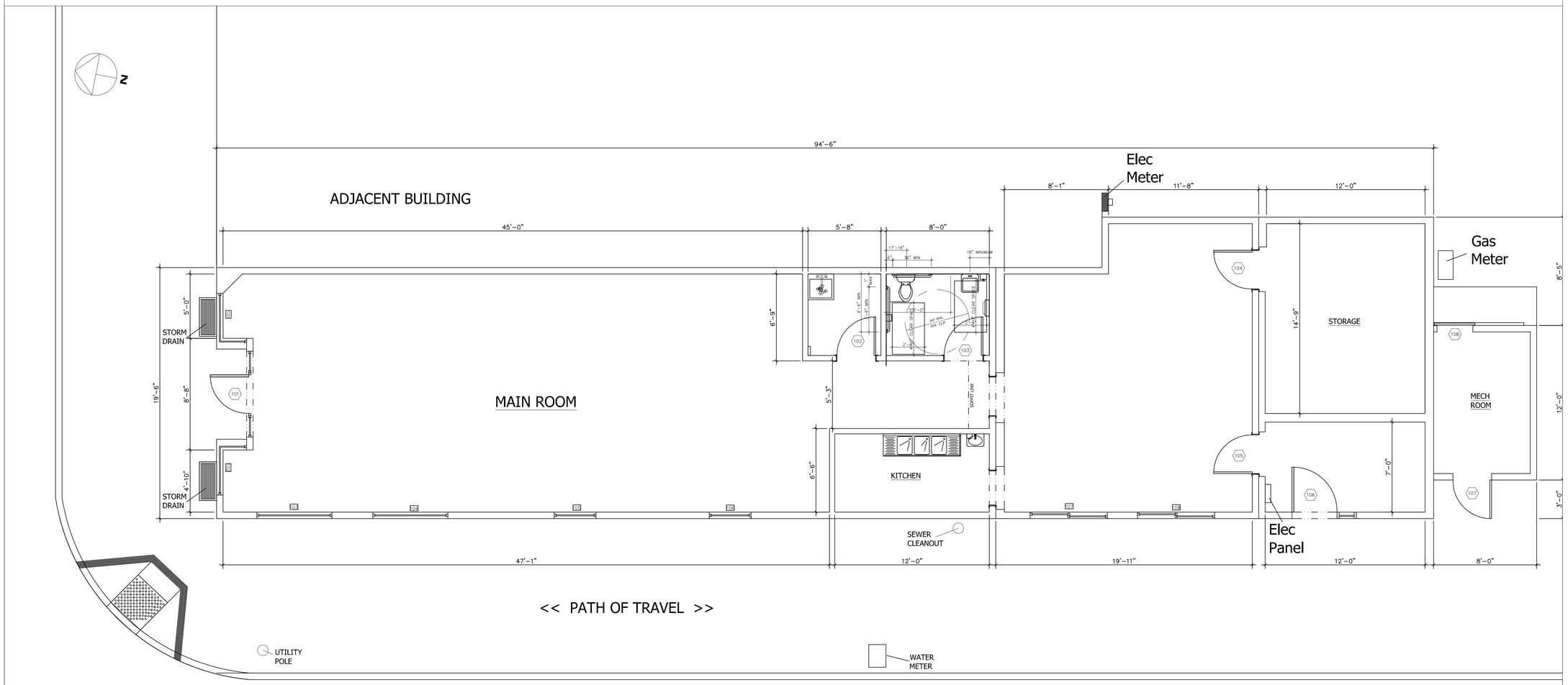


1 Existing Floor Plan
Scale 1/4" = 1'

| # | REVISIONS | DATE | BY |
|---|---|---|---|
| | | | |

RUFF + ASSOCIATES


RUFF + ASSOCIATES
Architecture Planning Development
100 West Standley Street, Ukiah, CA 95482
Phone: 707-472-0525 Fax: 707-472-0527
e-mail: richard@ruffarchitect.com

COPYRIGHT © BY RUFF + ASSOCIATES, ALL RIGHTS RESERVED.

CA License # C11736 – B597217

LICENSED ARCHITECT RICHARD RUFF NO. C11736 REN.11-30-21 STATE OF CALIFORNIA

DAVID MCGINTY
195 SEMINARY AVE
UKIAH, CA 95482
APN: 002-191-23

SHEET TITLE
EXISTING FLOOR PLAN

| | |
|---|---|
| DRAWN BY | PSM |
| CHECKED BY | RPR |
| DATE SUBMITTED | 9-15-2021 |
| DATE CREATED | 9-15-2021 |
| SCALE | AS NOTED |

PAGE
A2.0
SHEET 5 OF 11

## EXISTING DOOR SCHEDULE

(E) EXISTING DOOR (N) NEW DOOR LH-LEVER HANDLE LK- LOCKABLE

(E) 101 - 3'0" x 6'8" - EXTERIOR ALUMINUM GLASS TEMPERED PUSH HANDLE
(N) 102 - 3'0" x 6'8" - INTERIOR WOOD SOLID CORE LH / LC
(N) 103 - 3'0" x 6'8" - INTERIOR WOOD SOLID CORE LH / LC
(E) 104 - 3'0" x 6'8" - INTERIOR WOOD SOLID CORE LH / LC
(E) 105 - 3'0" x 6'8" - INTERIOR WOOD SOLID CORE LH / LC
(E) 106 - 3'0" x 6'8" - INTERIOR WOOD SOLID CORE LH
(E) 107 - 3'0" x 6'8" - INTERIOR WOOD SOLID CORE LH
(E) 108 - 3'0" x 6'8" - EXTERIOR METAL FIRE RATED LH / LC
(E) 109 - 3'0" x 6'8" - EXTERIOR METAL FIRE RATED LH / LC
(E) 110 - 3'0" x 6'8" - EXTERIOR METAL BARN SLIDER LC

NOTE: ALL EXTERIOR DOORS AND GATES TO MEET THE REQUIREMENTS OF CBC SECTION 708A.3

## EXISTING WINDOW SCHEDULE

101 - 4'4", 2'4" x 6'0" - SINGLE PANE PLATE TEMPERED LOW E
102 - 4'4", 2'4" x 6'0" - SINGLE PANE PLATE TEMPERED LOW E
103 - 5'10" x 5'10" - SINGLE PANE PLATE TEMPERED LOW E
104 - 5'10" x 5'10" - SINGLE PANE PLATE TEMPERED LOW E
105 - 3'3" x 5'5" - SINGLE PANE PLATE TEMPERED LOW E
106 - 3'3" x 5'5" - SINGLE PANE PLATE TEMPERED LOW E
107 - 6'0" x 2'3" - DUAL PANE SLIDER LOW E
108 - 6'0" x 2'3" - DUAL PANE SLIDER LOW E

NOTE: ALL EXTERIOR GLAZING TO MEET THE REQUIREMENTS OF CBC 2019 SECTION 708A.2

ALL NEW DOOR OPENING HARDWARE SHALL BE CENTERED BETWEEN 34 AND 44 INCHES ABOVE THE FLOOR CBC 11B-404.2.7

ALL NEW OR ALTERED DOORS SHALL NOT BE MORE THAN $\frac{1}{2}$" LOWER THAN THE THESHHOLD REQUIREMENTS CBC 11B-404.2.5

Door Opening Force.
Fire doors shall have the minimum opening force allowable by the appropriate administrative authority. The force for pushing or pulling doors other than Fire Doors shall be as follows:
1. Interior hinged door 5.0 pounds (22.2 N) maximum
2.Sliding or Folding Door 5.0 pounds (22.2 N) maximum

These forces do not apply to the force required to retract latch bolts or disengage other devices that hold the door in a closed position...

Door Opening Force:
The maximum force for pushing or pulling open a door shall be as follows:
Doors: These forces apply only to opening the door, not to the effort required to retract latch bolts or disengage other devices that may hold the door in a closed position.
A.Exterior Hinged Door 5 pounds
B.Interior Hinged Door 5 pounds
C. Sliding or Folding Doors 5 pounds
Exception: Fire Doors shall have the minimum force allowable by the apropriate administrative authority Compensating Devices: Doors requiring greater force shall be equipped with compensating devices toreduce the operating force or shall be equipped with automatic opening devices.

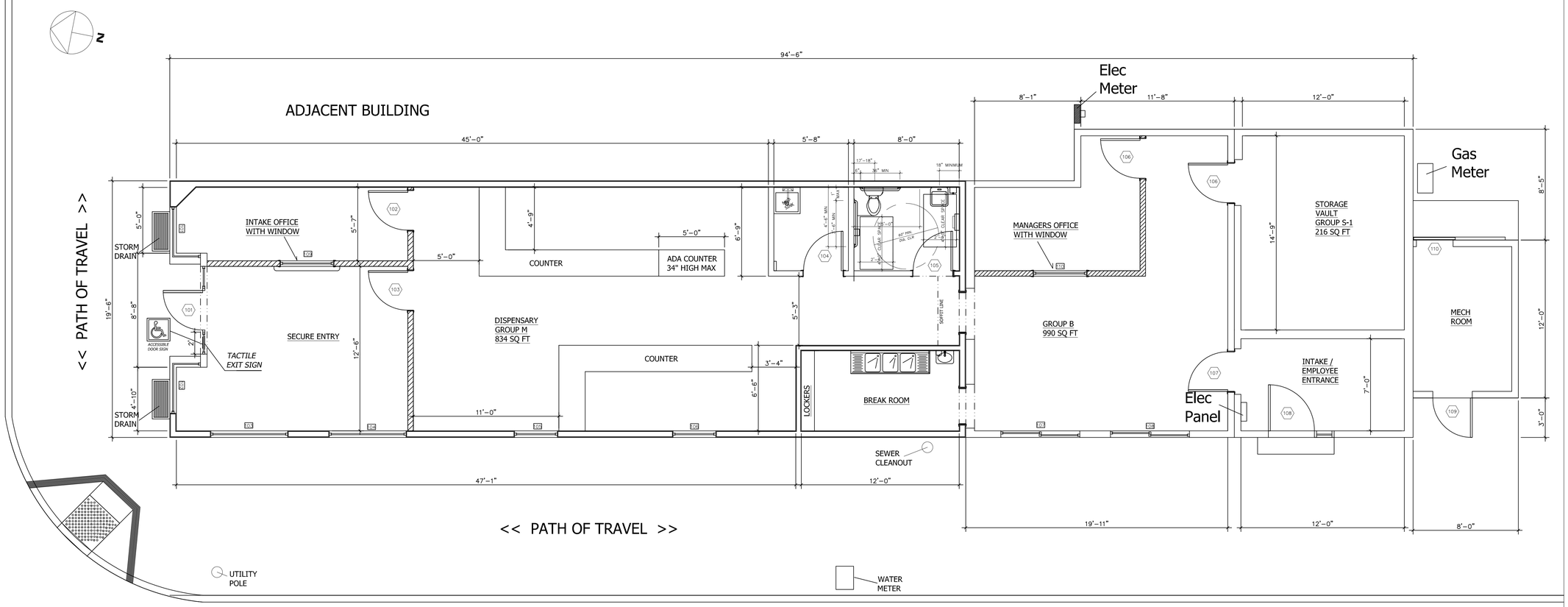


WALL TYPE LEGEND

EXISTING WALLS

NEW WALLS

1 Floor Plan
Scale 1/4" = 1'

| # | REVISIONS | DATE | BY |
|---|---|---|---|
| | | | |

RUFF + ASSOCIATES


RUFF + ASSOCIATES
Architecture Planning Development
100 West Standley Street, Ukiah, CA 95482
Phone: 707-472-0525 Fax: 707-472-0527
e-mail: richard@rufforchitect.com

COPYRIGHT © BY RUFF + ASSOCIATES, ALL RIGHTS RESERVED.

CA License # C11736 - B597217

LICENSED ARCHITECT RICHARD RUFF NO. C11736 REN.11-30-21 STATE OF CALIFORNIA

DAVID MCGINTY
195 SEMINARY AVE
UKIAH, CA 95482
APN: 002-191-23

SHEET TITLE
PROPOSED FLOOR PLAN

| | |
|---|---|
| DRAWN BY | PSM |
| CHECKED BY | RPR |
| DATE SUBMITTED | 9-15-2021 |
| DATE CREATED | 9-15-2021 |
| SCALE | AS NOTED |

PAGE
A2.1
SHEET 6 OF 11

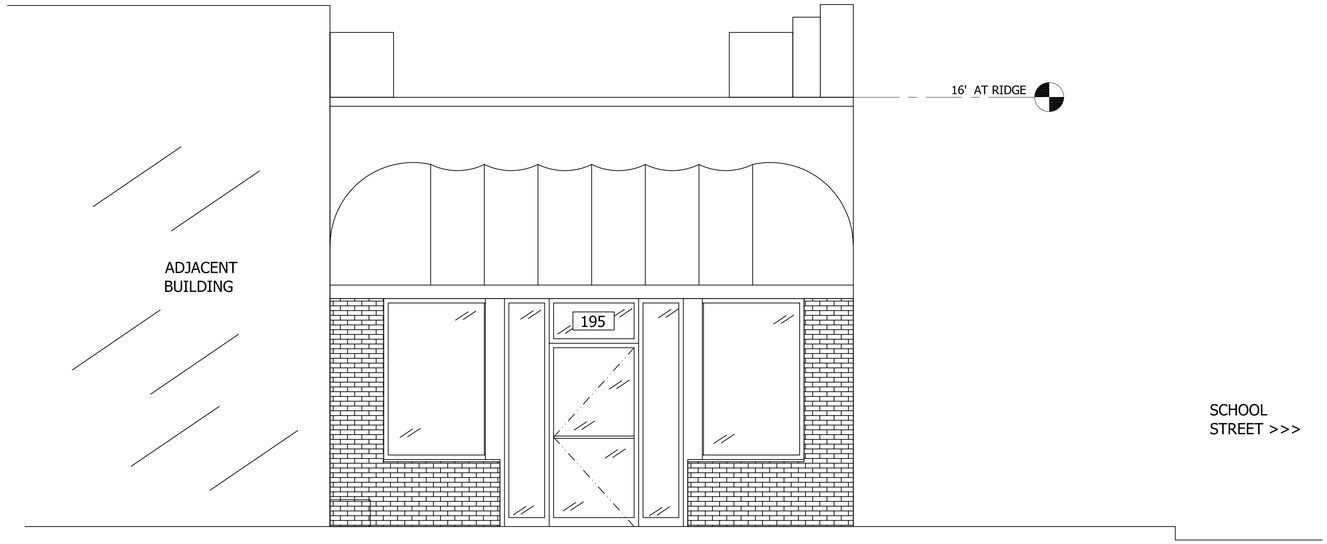


1 Existing North Elevation
Scale 3/8" = 1'

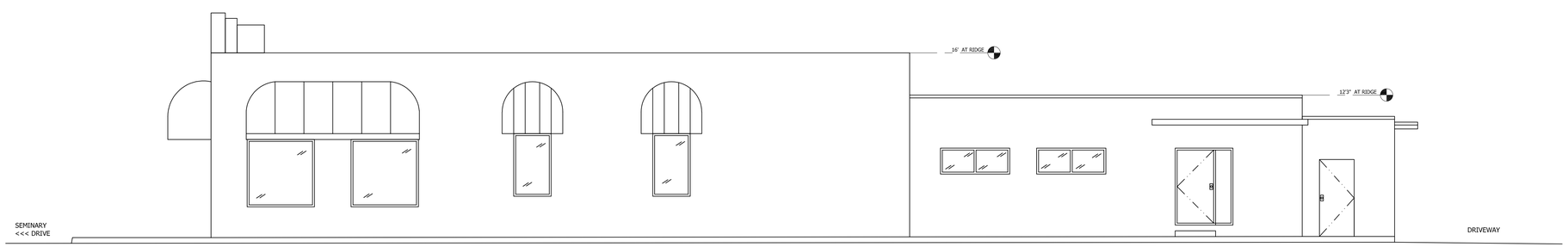


2 Existing West Elevation
Scale 1/4" = 1'

| # | REVISIONS | DATE | BY |
|---|---|---|---|
| | | | |

RUFF + ASSOCIATES

RUFF + ASSOCIATES
Architecture Planning Development
100 West Standley Street, Ukiah, CA 95482
Phone: 707-472-0525 Fax: 707-472-0527
e-mail: richard@ruffarchitect.com
COPYRIGHT © BY RUFF + ASSOCIATES, ALL RIGHTS RESERVED.

CA License # C11736 – B597217

LICENSED ARCHITECT
RICHARD RUFF
NO. C11736
REN.11-30-21
STATE OF CALIFORNIA

DAVID MCGINTY
195 SEMINARY AVE
UKIAH, CA 95482
APN: 002-191-23

SHEET TITLE

EXISTING ELEVATIONS

| | |
|---|---|
| DRAWN BY | PSM |
| CHECKED BY | RPR |
| DATE SUBMITTED | 9-15-2021 |
| DATE CREATED | 9-15-2021 |
| SCALE | AS NOTED |

PAGE
A3.0
SHEET 7 OF 11

1 Proposed North Elevation
Scale 3/8" = 1'

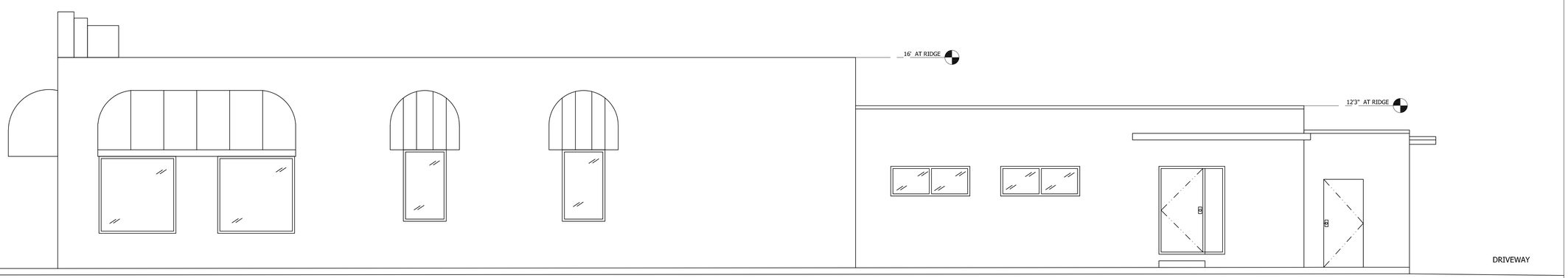


2 Proposed West Elevation
Scale 1/4" = 1'

| # | REVISIONS | DATE | BY |
|---|---|---|---|
| | | | |

RUFF + ASSOCIATES

RUFF + ASSOCIATES
Architecture Planning Development
100 West Standley Street, Ukiah, CA 95482
Phone: 707-472-0525 Fax: 707-472-0527
e-mail: richard@ruffarchitect.com
COPYRIGHT © BY RUFF + ASSOCIATES, ALL RIGHTS RESERVED.

CA License # C11736 – B597217

LICENSED ARCHITECT
RICHARD RUFF
NO. C11736
REN.11-30-21
STATE OF CALIFORNIA

DAVID MCGINTY
195 SEMINARY AVE
UKIAH, CA 95482
APN: 002-191-23

SHEET TITLE
EXISTING ELEVATIONS

| | |
|---|---|
| DRAWN BY | PSM |
| CHECKED BY | RPR |
| DATE SUBMITTED | 9-15-2021 |
| DATE CREATED | 9-15-2021 |
| SCALE | AS NOTED |

PAGE
A3.1
SHEET 8 OF 11

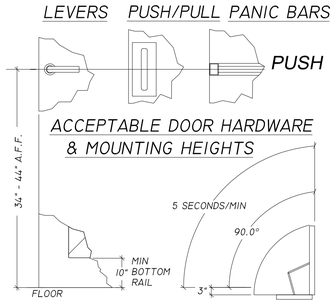


DOOR OPERATING HARDWARE TO BE INSTALLED 34"-44" A.F.F.
2019 CBC 11B-404.2.7

11B-404.2.8.1. DOOR CLOSERS & GATE CLOSERS
DOOR CLOSERS & GATE CLOSERS SHALL BE ADJUSTED SO THAT FROM AN OPEN POSITION OF 90 DEGREES, THE TIME
REQUIRED TO MOVE THE DOOR TO A POSITION OF 12 DEGREES FROM THE LATCH IS 5 SECONDS

THE CONTROLS AND OPERATING MECHANISMS ON WINDOWS AND DOORS SHALL BE OPERABLE WITH ONE HAND AND SHALL NOT REQUIRE TIGHT GRASPING, PINCHING OR TWISTING OF THE WRIST. THE FORCE REQUIRED TO ACTIVATE CONTROLS SHALL BE NOT GREATER THAN 5 LBS. FORCE.

## 10 DOOR HARDWARE
1/2" = 1'-0"

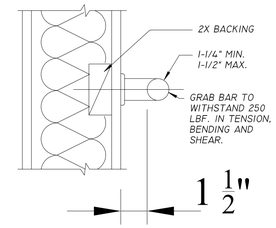


## 1 TYPICAL BLOCKING @ GRAB BAR
3" = 1'-0"

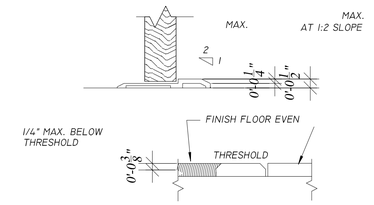


## 2 THRESHOLD DETAIL
3" = 1'-0"

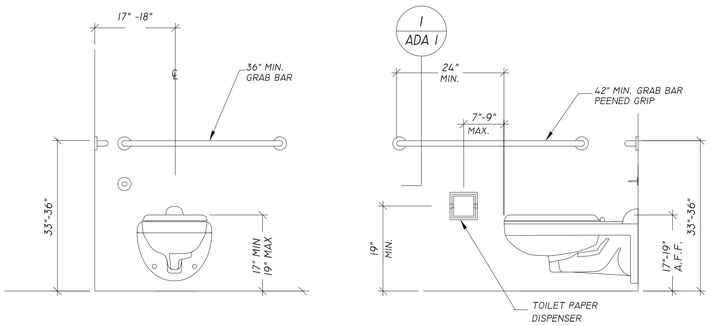


## 8 FIXTURE ELEVATION
3/4" = 1'-0"

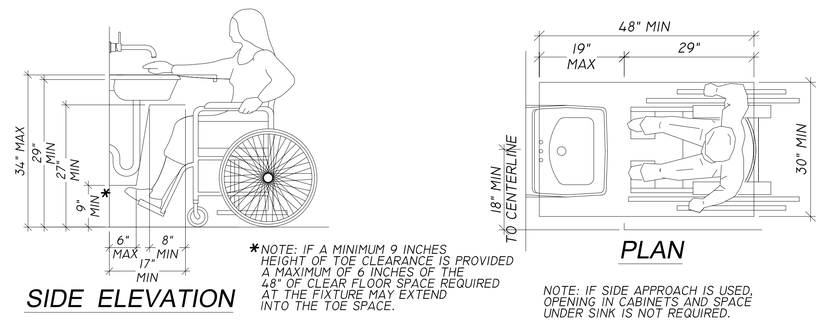


*NOTE: IF A MINIMUM 9 INCHES HEIGHT OF TOE CLEARANCE IS PROVIDED A MAXIMUM OF 6 INCHES OF THE 48" OF CLEAR FLOOR SPACE REQUIRED AT THE FIXTURE MAY EXTEND INTO THE TOE SPACE.

NOTE: IF SIDE APPROACH IS USED, OPENING IN CABINETS AND SPACE UNDER SINK IS NOT REQUIRED.

## 5 MIN CLEAR WORK SPACE UNDER WORK SURFACE
3/4" = 1'-0"

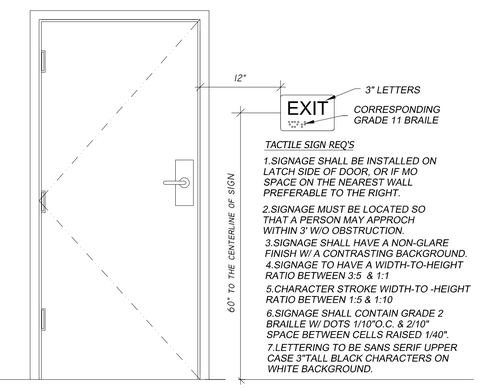


TACTILE SIGN REQ'S

1.SIGNAGE SHALL BE INSTALLED ON LATCH SIDE OF DOOR, OR IF MO SPACE ON THE NEAREST WALL PREFERABLE TO THE RIGHT.

2.SIGNAGE MUST BE LOCATED SO THAT A PERSON MAY APPROCH WITHIN 3' W/O OBSTRUCTION.

3.SIGNAGE SHALL HAVE A NON-GLARE FINISH W/ A CONTRASTING BACKGROUND.

4.SIGNAGE TO HAVE A WIDTH-TO-HEIGHT RATIO BETWEEN 3:5 & 1:1

5.CHARACTER STROKE WIDTH-TO -HEIGHT RATIO BETWEEN 1:5 & 1:10

6.SIGNAGE SHALL CONTAIN GRADE 2 BRAILLE W/ DOTS 1/10"O.C. & 2/10" SPACE BETWEEN CELLS RAISED 1/40".

7.LETTERING TO BE SANS SERIF UPPER CASE 3"TALL BLACK CHARACTERS ON WHITE BACKGROUND.

## 3 TACTILE SIGNAGE DETAIL
3/4" = 1'-0"

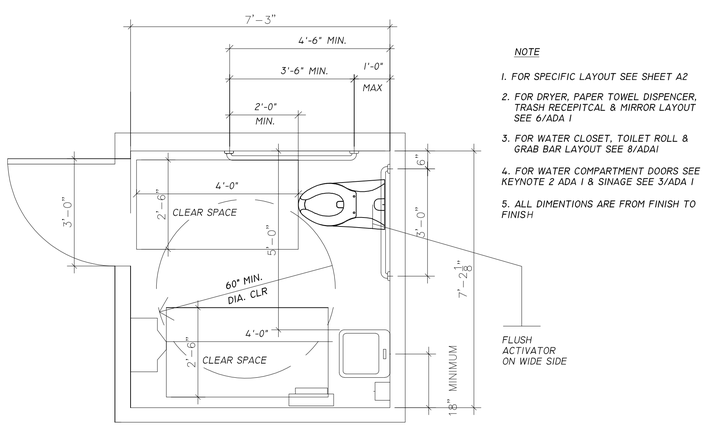


NOTE

1. FOR SPECIFIC LAYOUT SEE SHEET A2

2. FOR DRYER, PAPER TOWEL DISPENCER, TRASH RECEPITCAL & MIRROR LAYOUT SEE 6/ADA 1

3. FOR WATER CLOSET, TOILET ROLL & GRAB BAR LAYOUT SEE 8/ADA1

4. FOR WATER COMPARTMENT DOORS SEE KEYNOTE 2 ADA 1 & SINAGE SEE 3/ADA 1

5. ALL DIMENTIONS ARE FROM FINISH TO FINISH

## 9 SECTION 11B-233 ADA WATER CLOSET REQUIREMENTS
1/2" = 1'-0"

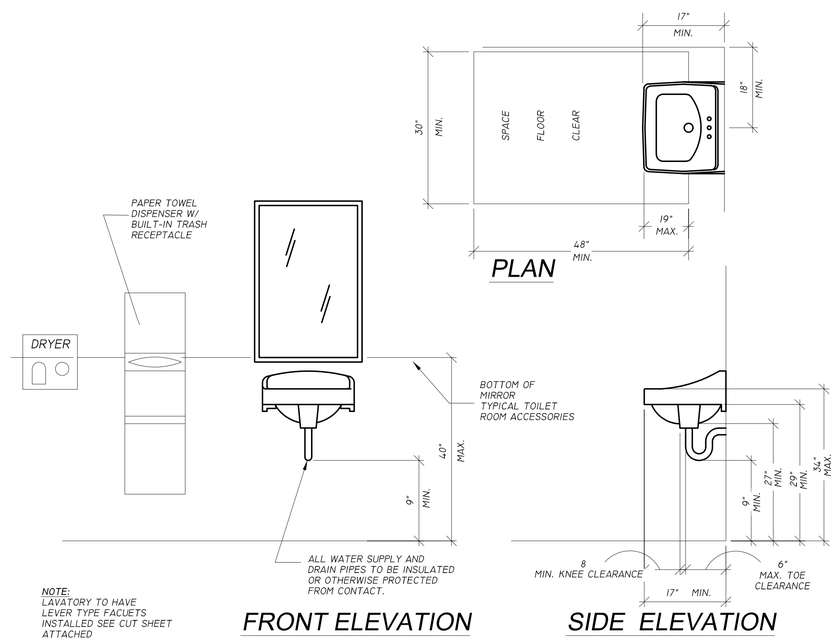


NOTE:
LAVATORY TO HAVE LEVER TYPE FACUETS INSTALLED SEE CUT SHEET ATTACHED

## 6 LAVATORIES
3/4" = 1'-0"

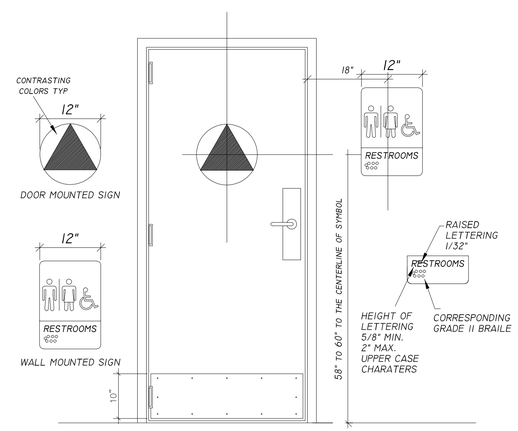


## 4 ACCESSIBLITY SIGNAGE DETAIL
3/4" = 1'-0"

| # | REVISIONS | DATE | BY |
|---|---|---|---|
| | | | |

RUFF + ASSOCIATES

RUFF + ASSOCIATES
Architecture Planning Development
100 West Standley Street, Ukiah, CA 95482
Phone: 707-472-0525 Fax: 707-472-0527
e-mail: richard@rufforchitect.com
COPYRIGHT © BY RUFF + ASSOCIATES, ALL RIGHTS RESERVED.

CA License # C11736 – B597217

LICENSED ARCHITECT RICHARD RUFF NO. C11736 REN.11-30-21 STATE OF CALIFORNIA

DAVID MCGINTY
195 SEMINARY AVE
UKIAH, CA 95482
APN: 002-191-23

SHEET TITLE
ADA BATHROOM REQUIREMENTS

| | |
|---|---|
| DRAWN BY | PSM |
| CHECKED BY | RPR |
| DATE SUBMITTED | 9-15-2021 |
| DATE CREATED | 9-15-2021 |
| SCALE | AS NOTED |

PAGE
ADA1
SHEET 9 OF 11

## ELECRICAL LEGEND

- DATA JACK
- DUPLEX OUTLET
- GFI OUTLET
- 220V OUTLET
- ELECTRICAL SUB PANEL
- ELECTRICAL MAIN

NOTATION: ALL SWITCHES TO BE ON OCCUPANCY SENSOR
NOTATION: ALL OUTLETS TO BE INSTALLED 15" ABOVE FINISHED FLOOR AT BOTTOM
ALL SWITCHES TO BE INSTALLED 48" AT TOP OF SWITCH OR LOWER...

*ALL OUTLETS SHALL BE AFCI CEC 210.12(B)
*All RECEPTACLES SHALL BE TAMPER-RESISTANT CEC 406.12

| LIGHT FIXTURE LEGEND | Qty | Total |
|---|---|---|
| EXTERIOR FLOOD - 60 WATTS (PV) | 1 each | 200 Watts |
| WALL SCONCE - 60 WATTS | 2 each | 120 Watts |
| RECESSED CAN LIGHTS - 7.6 WATTS | 1 each | 7.6 Watts |
| CEILING MOUNTED FLORESCENT FIXTURE 12" X 48" 2 TUBE 60 WATTS | 7 Each | 420 Watts |
| CEILING MOUNTED FLORESCENTFIXTURE 24" X 48" 4 TUBE 120 WATTS | 11 Each | 1320 Watts |
| BROAN QTX110SL FAN LIGHT W/ HUMIDSTAT OR EQUAL | 2 Each | 3000 Watts |

| 200 Amp 120 / 240 Volt Curcuit Panel - Single Phase | | |
|---|---|---|
| 120 Volt | LIGHTS AND PLUGS | 20 Amp |
| 120 Volt | LIGHTS AND PLUGS | 20 Amp |
| 120 Volt | BREAKROOM LIGHTS AND PLUGS | 20 Amp |
| 120 Volt | BACK AREA LIGHTS AND PLUGS | 20 Amp |
| 240 Volt | HVAC | 20 Amp |

## PLUMBING LEGEND

| Description | Cold In | Hot In | Drain | Notes |
|---|---|---|---|---|
| ADA BATHROOM SINK | 1/2" | 1/2" | 1 1/2" | 2" WASTE LINE |
| ADA BATHROOM TOILET | 1/2" | X | 4" | 4" WASTE LINE |
| MOP SINK | 1/2" | 1/2" | 1 1/2" | 2" WASTE LINE |
| KITCHEN SINK | 1/2" | 1/2" | 1 1/2" | 2" WASTE LINE |
| UTILITY SINK | 1/2" | 1/2" | 1 1/2" | 2" WASTE LINE |

NOTATIONS:
BATH VENTILATION:
1 ½ sq ft ( 5% OF FLOOR AREA ) OPERABLE WINDOW OR 50 CFM (5 CHNGS/HR)
EXHAUST FAN REQUIRED.
PLUMBING NOTES:
TOILETS TO BE MAXIMUM 1.28 GALLON LOW FLUSH
GAS UNITS HALL HAVE GAS SHUT Off VALVE WITHIN 3 FEET
( CMC 304.8 305.6 306.3 306.2 308.1 )

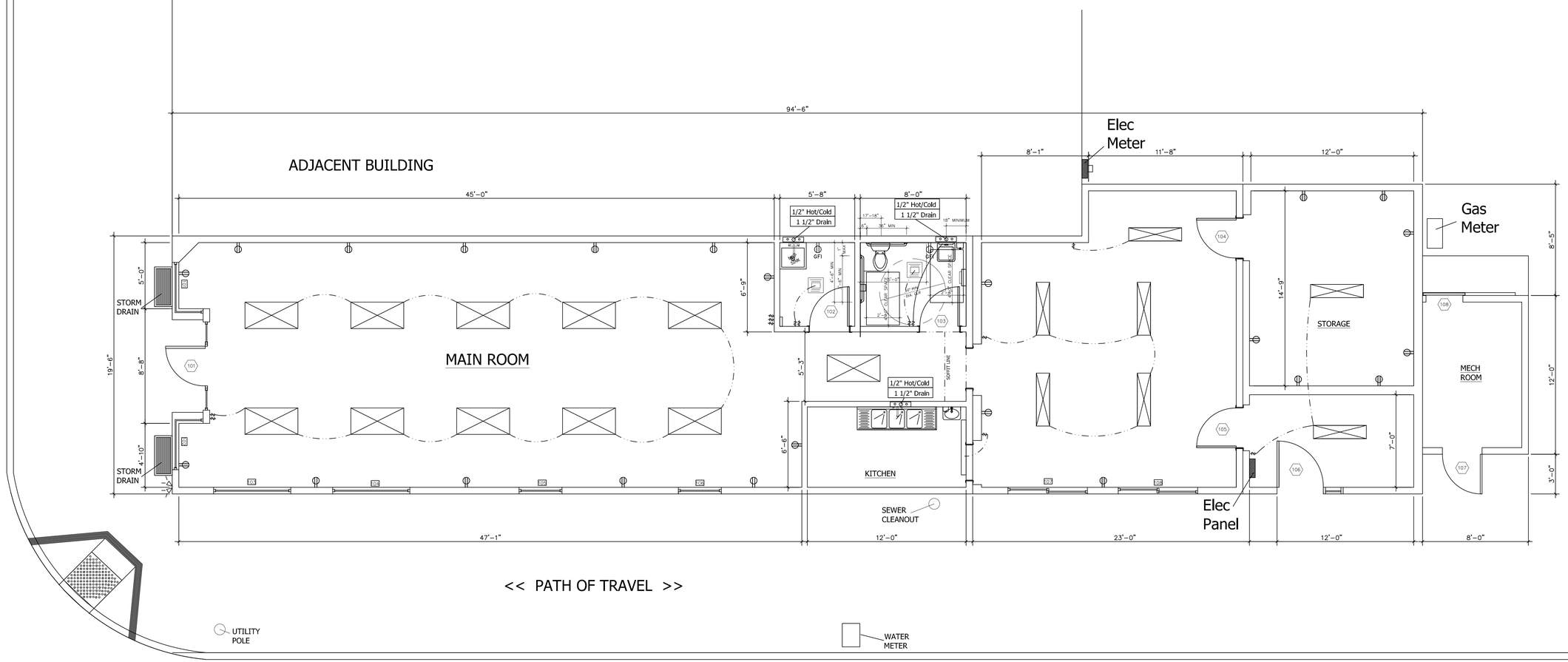


1 ELECTRICAL AND PLUMBING PLANS
SCALE 1/4" = 1'

| # | REVISIONS | DATE | BY |
|---|---|---|---|

RUFF + ASSOCIATES


RUFF + ASSOCIATES
Architecture Planning Development
100 West Standley Street, Ukiah, CA 95482
Phone: 707-472-0525 Fax: 707-472-0527
e-mail: richard@rufforchitect.com

COPYRIGHT © BY RUFF + ASSOCIATES. ALL RIGHTS RESERVED.

CA License # C11736 - B597217

LICENSED ARCHITECT RICHARD RUFF NO. C11736 REN.11-30-21 STATE OF CALIFORNIA

DAVID MCGINTY
195 SEMINARY DRIVE
UKIAH, CA 95482
APN: 002-191-23

SHEET TITLE
*POWER AND LIGHTING PLAN*

| | |
|---|---|
| DRAWN BY | PSM |
| CHECKED BY | RPR |
| DATE SUBMITTED | 9-15-2021 |
| DATE CREATED | 9-15-2021 |
| SCALE | AS NOTED |

PAGE
E1P1
SHEET 10 OF 11

## ELECRICAL LEGEND

- DATA JACK
- DUPLEX OUTLET
- GFI OUTLET
- 220V OUTLET
- ELECTRICAL SUB PANEL
- ELECTRICAL MAIN

NOTATION: ALL SWITCHES TO BE ON OCCUPANCY SENSOR
NOTATION: ALL OUTLETS TO BE INSTALLED 15" ABOVE FINISHED FLOOR AT BOTTOM
ALL SWITCHES TO BE INSTALLED 48" AT TOP OF SWITCH OR LOWER...

*ALL OUTLETS SHALL BE AFCI CEC 210.12(B)
*All RECEPTACLES SHALL BE TAMPER-RESISTANT CEC 406.12

| LIGHT FIXTURE LEGEND | Qty | Total |
|---|---|---|
| EXTERIOR FLOOD - 60 WATTS (PV) | 1 each | 200 Watts |
| WALL SCONCE - 60 WATTS | 2 each | 120 Watts |
| RECESSED CAN LIGHTS - 7.6 WATTS | 1 each | 7.6 Watts |
| CEILING MOUNTED FLORESCENT FIXTURE 12" X 48" 2 TUBE 60 WATTS | 7 Each | 420 Watts |
| CEILING MOUNTED FLORESCENTFIXTURE 24" X 48" 4 TUBE 120 WATTS | 11 Each | 1320 Watts |
| BROAN QTX110SL FAN LIGHT W/ HUMIDSTAT OR EQUAL | 2 Each | 3000 Watts |

| 200 Amp 120 / 240 Volt Curcuit Panel - Single Phase | | |
|---|---|---|
| 120 Volt | LIGHTS AND PLUGS | 20 Amp |
| 120 Volt | LIGHTS AND PLUGS | 20 Amp |
| 120 Volt | BREAKROOM LIGHTS AND PLUGS | 20 Amp |
| 120 Volt | BACK AREA LIGHTS AND PLUGS | 20 Amp |
| 240 Volt | HVAC | 20 Amp |

## PLUMBING LEGEND

| Description | Cold In | Hot In | Drain | Notes |
|---|---|---|---|---|
| ADA BATHROOM SINK | 1/2" | 1/2" | 1 1/2" | 2" WASTE LINE |
| ADA BATHROOM TOILET | 1/2" | X | 4" | 4" WASTE LINE |
| MOP SINK | 1/2" | 1/2" | 1 1/2" | 2" WASTE LINE |
| KITCHEN SINK | 1/2" | 1/2" | 1 1/2" | 2" WASTE LINE |
| UTILITY SINK | 1/2" | 1/2" | 1 1/2" | 2" WASTE LINE |

NOTATIONS:
BATH VENTILATION:
1 ½ sq ft ( 5% OF FLOOR AREA ) OPERABLE WINDOW OR 50 CFM (5 CHNGS/HR)
EXHAUST FAN REQUIRED.
PLUMBING NOTES:
TOILETS TO BE MAXIMUM 1.28 GALLON LOW FLUSH
GAS UNITS HALL HAVE GAS SHUT Off VALVE WITHIN 3 FEET
( CMC 304.8 305.6 306.3 306.2 308.1 )

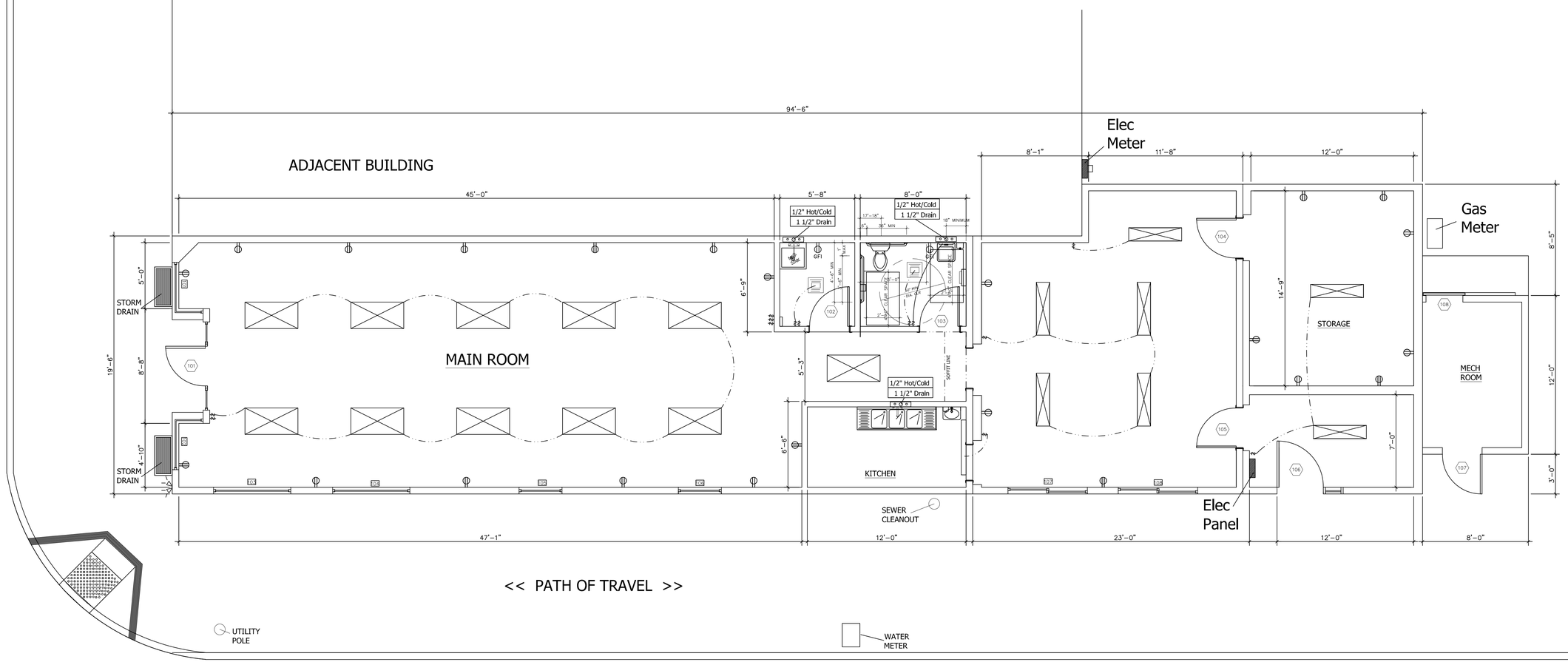


1 ELECTRICAL AND PLUMBING PLANS
SCALE 1/4" = 1'

| # | REVISIONS | DATE | BY |
|---|---|---|---|

RUFF + ASSOCIATES


RUFF + ASSOCIATES
Architecture Planning Development
100 West Standley Street, Ukiah, CA 95482
Phone: 707-472-0525 Fax: 707-472-0527
e-mail: richard@rufforchitect.com

COPYRIGHT © BY RUFF + ASSOCIATES. ALL RIGHTS RESERVED.

CA License # C11736 - B597217

LICENSED ARCHITECT RICHARD RUFF NO. C11736 REN.11-30-21 STATE OF CALIFORNIA

DAVID MCGINTY
195 SEMINARY DRIVE
UKIAH, CA 95482
APN: 002-191-23

SHEET TITLE
*POWER AND LIGHTING PLAN*

| | |
|---|---|
| DRAWN BY | PSM |
| CHECKED BY | RPR |
| DATE SUBMITTED | 9-15-2021 |
| DATE CREATED | 9-15-2021 |
| SCALE | AS NOTED |
| PAGE | E1P1 |
| SHEET | 10 OF 11 |

1300
1301
1302
Benjamin Moore


1307
1308
Benjamin Moore


DYNASTY
MARQUEE®
ONE-COAT
G3-4
Shark Fin
PPU24-19M


DYNASTY
MARQUEE®
ONE-COAT
G9-3
French Silver
PPU18-05M


DYNASTY
MARQUEE®
ONE-COAT
G12-2
Graycloth
PPU26-09U

*Local Roots, LLC*

**Application for Dispensary Permit at 195 Seminary Ave**

# Supplemental Information Re: Odor Control and Mitigation

## ODOR CONTROL AND MITIGATION PLAN

Local Roots will take active measures to ensure that the odor of cannabis does not become a nuisance for neighbors or the community. There are 2 forms of measures that will be implemented in the facility in order to reduce odor externalities. The first are Odor Control which are designed to prevent the escape of the Odor itself and the second are Odor Mitigation measures which serve to absorb and mask any odors which may be able to escape despite Odor Control measures.

### *Odor Controls*

The first and single most important aspect of our facilities Odor Control plan is no loose, unpackaged or unsealed cannabis will be allowed to enter the facility. Therefore 100% of the cannabis products will be vacuum sealed or completely air-tight meaning that little to no odor will escape the packaging. Therefore before any of the other measures are implemented there will already be a limited amount of odor generated by the products to begin with.

The second odor control is where and how the cannabis products are physically stored within the facility. All Cannabis products will be stored in the Cannabis Vault/Storage room. This room will have a non-permeable door with weather strip seals to ensure the space is airtight. Additionally, all of the exterior doors of the facility as well as the door separating the Retail Floor from the Limited Access Area will be equipped with non-permeable doors and weather strips to prevent the flow of air. In combination with the fact that all of the products are sealed and the Odor Mitigation procedures delineated below this should be sufficient to prevent the escape of odors.

### *Odor Mitigation*

The most important Odor Mitigation measure is the use of an advanced filtration system to scrub odors from the air. The TRACS UV-C Portable Air Purifier makes use of Carbon Filtration, Ultra-Violet Irradiation and HEPA filtration in order to ensure odors are removed from the air. The facility will place one of these units in the Cannabis Vault/Storage Area. This unit has the capacity to filter all of the air in a room of 1,875 square feet with 8 foot ceilings in 1 hour. The entire facility has 8 foot ceilings and an interior square footage of approximately 2,000 feet. Therefore it should only take slightly over 1 hour for the machine to circulate and filter all of the air in the building. Attached to this Plan as Exhibit A are the specifications for the TRACS UV-C Portable Air Purifier.

Finally the facility will make use Indoor Plants to both filter the air of any odors as well as produce their own pleasant alternative odors. At least 3 potted plants will be placed in the retail area and 1 in the Staff area, those plants will be selected from amongst the following species: Aloe Vera; Bamboo Palm; Peace Lily; Spider Plant; Parlor Palm; Red Emerald Philodendron, Gerbera Daisy.

# EXHIBIT A

TRACS PURIFIERS

# TRACS® Portable UV-C Air Purifier

**$1,199.00**

Starting at $109/mo with Affirm.

## ABOUT

### TRACS® UV-C AIR PURIFIER

TRACS® UV-C Air Purifier is the most versatile and effective commercial and residential air cleaner on the market today. Based on the same technology used in hospitals and medical facilities for high-risk infection control, TRACS is a portable multi-stage air treatment system combining certified HEPA filtration, high dosage UV lamps, and activated carbon. These technologies are known to eliminate human coronaviruses, bacteria, odors, dust, allergens, molds and volatile organic compounds (VOCs) at the highest efficiencies.

Covering up to 1,875-sqft, the TRACS® portable UV-C air purifier is the only medical grade air purifier made in the USA out of solid steel with a life-time guarantee. Designed for quiet operation and low-cost maintenance, TRACS will change the way you live and breathe in your home or office.

## Features

- Commercial quality version of our medical grade mobile and ceiling mounted air systems installed in hospitals, laboratories, and other medical facilities across the world.
- HEPA Filter certified to be 99.99% efficient @ .3 microns traps bacteria, viruses, dust, pollen and more. HEPA is locked into place preventing air bypass.
- Two high dosage UV lamps located before and radiating on the dirty/inlet side of the HEPA filter destroy airborne and trapped bacteria, viruses and molds.
- CarbonWeb® Pre-filter removes odors and toxic gases.
- Four-speed motorized impeller features "Whisper Mode" for quiet operation.
- Indicator lights let you know exactly when to replace lamps.
- Purifies the air in up to 1,875 sf every 1 hour.
- Easy filter and lamp access - No Tools Required.
- Lowest Annual Operating cost of any Air Purifier utilizing Hepa, Carbon and UVGI Technology.

1-800-813-6247
support@tracspurifiers.com

www.tracspurifiers.com

# TECHNICAL SPECIFICATIONS

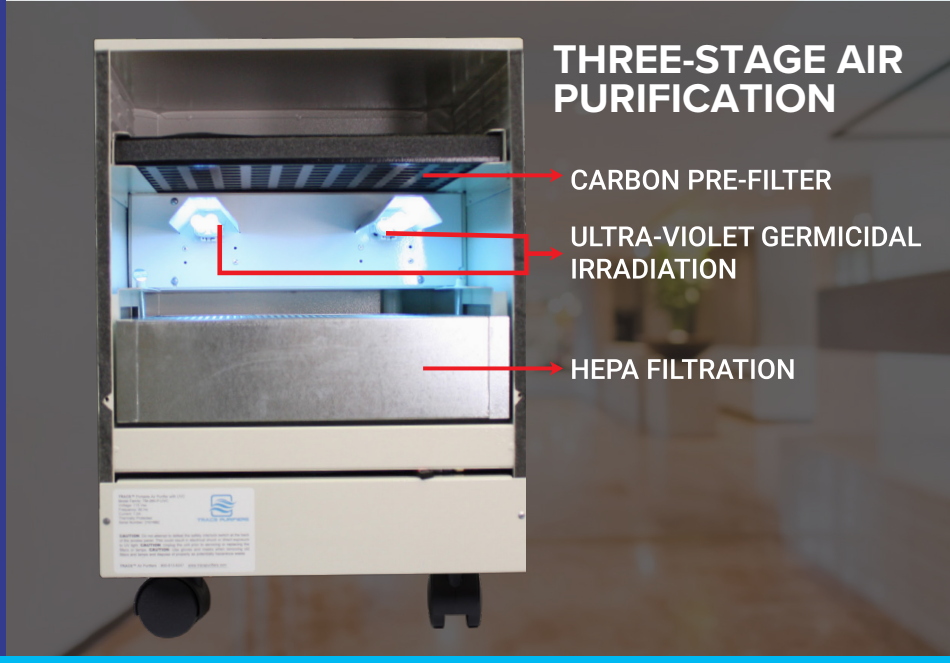


| | |
|---|---|
| **CFM** | 85 CFM, 150 CFM, 200 CFM, 250 CFM |
| **Electrical** | 120 volt, 60 Hz, single phase, 1 amp, 100 watts, 6 foot cord |
| **Room Size** | Coverage 1,875 sq. ft. per hour, 937 sq. ft. every 30 mins |
| **Dimensions** | 15.5" W x 15.5" D x 21.5" H |
| **Weight** | 46 lbs, Packaged Weight 52 lbs |
| **Decibel** | Whisper Mode- 44 DB, Low- 49 DB, Medium- 55 DB, High- 59 DB |
| **Controls** | 4 Speed Controller (54W, 65W, 81W, 100W) |
| **Construction** | 18 gauge galvinized steel with powder-coated finish |
| **Warranty** | 30 day money back guarantee, 5 year mechanical warranty, and life-time warranty on the welded and powder-coated frame |
| **Maintenance Costs** | **CarbonWeb Pre-Filter Cartridge:** replace every 30-180 days, depending on application, cost is $29 each ($23 with auto refill)<br>**Medical Grade HEPA filter:** up to 5 years for the life, cost is $149 ($119 with auto-refill)<br>**UV-C Lamps:** change when indicator light goes out, about every 18 months, cost is $39 ($31 with auto-refill) |

# Products Intake and Dispatch Plan

Local Roots, LLC

Dispensary Application at 195 Seminary Ave

## PRODUCTS INTAKE AND DISPATCH OVERVIEW

Public facing cannabis businesses like dispensaries must take extraordinary care whenever large quantities of product are entering or exiting the facility. This document delineates 2 possible alternative layouts for parking which slightly affect the way products enter and exit the building. The 2 scenarios in which large quantities of product are entering or exiting the building are: (1) product intake from commercial distributors; and (2) the retail delivery dispatch process.

## LAYOUT OF 195 SEMINARY'S PRIVATE ENTRANCE

Fortunately, 195 Seminary Ave has 2 entrances, which allows operations to separate the public from the private entrance. The public entrance is for customers or even staff but will never under any circumstances be used to bring wholesale or large quantities of product into the building. On the attached EXHIBIT A you can see the path of travel and steps required for entry for customers visiting the dispensary. The steps associated with admitting customers through the public entrance are expressed in Blue on the north end of the building.

Conversely, on the south end of the building the writing in Red delineates the path of travel and requisite steps for products entering the dispensary when they are being dropped off a by a commercial distributor. Products will always enter the building through the rear private entrance on South School Street. Similarly, Delivery Drivers who are carrying their "Delivery Kits" (more below) to the delivery vehicle for dispatch will also always both exit and enter the building through the private entrance.

In EXHIBIT A it is assumed that either the incoming distributor or outgoing delivery driver will be parked where the Red Box marked 1 is shown on the diagram. The Red Box marked 1 occupies an area that is currently a publicly available parking spot on South School Street. This area would need to be changed into a Loading Zone for this plan to be viable. Below is a description of how that parking space could be used to facility products intake and delivery dispatch once it has been turned into a loading zone.

## THE DISTRIBUTION INTAKE PROCESS

Dispensary staff will know well in advance before receiving any wholesale cannabis order. Any Cannabis Licensee planning to sell a wholesale order to the facility will be required to make an appointment with a Manager and provide: their commercial license; the name of the driver, their vehicle information; and approximate time of arrival. Because the facility does not have a roll-up door, wholesale cannabis must be received in the designated parking spot and escorted into the private entrance. As a result, the wholesale products must be received at our facility in a way that does not make them appear to be cannabis. The preferred method will be cardboard boxes however; any opaque storage container will be accepted by dispensary staff.

Upon arriving and parking the distributor's driver will call the dispensary in order to tell staff that he is in the designated parking spot and is ready to drop off

product. Staff will be equipped with 2 way radios in order to internally communicate events like the arrival of a distributor. A single staff member will enter the "Secure Entry Area" with a push-cart after confirming on the security cameras that the distributor is in fact parked. The "Secure Entry Area" is the antechamber adjacent to the private entrance. Once both doors to the "Secure Entry Area" are shut, and the door entering the dispensary is locked, the dispensary-staff member can go out of the Private Entrance in order to meet the driver. When the dispensary-staff member exits to meet the driver they will not be carrying a key to the facility and will be locking themselves out at this time. The parking spot will be directly visible by managers who can watch the cameras from inside of the dispensary behind 2 locked doors. The lock to the Private Entrance will also be controlled electronically by managers inside of the dispensary who can unlock or lock the private entrance at any time with the push of a button.

After confirming the driver's identity and reviewing the order the staff member will indicate to dispensary managers via 2-way-radio that the Distributor is verified and ready to enter. At this time the managers will unlock the private entrance and the Staff member and the Driver will unload the products from the Distributor's vehicle onto the cart in the "Secure Entry Area". Once all of the products are placed on the cart the private entrance will be shut and locked. Now the staff member can request access into the rest of the dispensary by simply knocking on the door separating the antechamber from the main staff area. The advantage of this plan is it creates 2 layers of protection and intentionally isolates the products in a small room before giving access to the rest of the dispensary.

Once admitted to the main Limited Access portion of the dispensary the Distributor and Manager will review both the order and incoming products in order to ensure accuracy. After confirming the order the Manager will wait until the Distributor has left the building and then unlock the Cannabis Storage area in order to store the new cannabis products.

## THE DELIVERY PROCESS

The vast majority of orders for delivery will be received online via internet-sales software, however phone orders will be possible as well. When a customer places a phone order the dispatcher will simply enter their order into the same software as customers who order themselves. From this point onwards the Delivery process works like the Distribution Process except in reverse.

Delivery Kits are lockable steel boxes, stored in the Trunk of the Delivery Vehicle with a GPS Tracking Device[1]. Delivery Kits will always include an inventory list and the total value of the inventory in any one kit will never exceed $5,000[2]. Every Delivery-Kit is prepared in the dispensary's limited access area by a manager for the drivers. Each kit is identical and is created by a checklist, which reflects a diverse array of items in the inventory. As the kit is being built and items are tallied

---

[1] 16 CCR § 5417

[2] 16 CCR § 5418

on the Checklist they are scanned into a software system, which automatically updates METRC.[3]

When a delivery driver is ready to leave they will receive a paper checklist from the dispatcher of what should have initially been in their delivery kit[4]. The delivery driver will review and confirm that this is what has been received before entering the Secure Entry Area alone and locking the door behind him. Once the driver is isolated in the Secure Entry Area with the delivery kit they can exit the private entrance and go directly to their vehicle which is awaiting them in the designated parking spot.

When a delivery employee returns to the premises the software will alert the dispatcher who will be able to verify this by looking at security cameras or with a call to the driver. The manager will remotely unlock the Private Entrance and the driver will then be admitted to the "Secure Entry Area". Once admitted to the Secure Entry Area the driver will shut the Private Entrance behind him, it will lock automatically, and then they can knock for admittance to the rest of the dispensary.

## ALTERNATIVE PARKING LOCATION

There are 2 issues, which our team can identify with this plan. The first is that it requires the conversion of a city parking space into a commercial loading zone. The second is that the unloading procedures will occur directly on the street making them visible to an observant member of the public. Therefore, attached as Exhibit B is a proposed demolition plan designed to make room for a loading zone behind the building. In the attached Demolition plan the buildings current "Mechanical Room" would be demolished and relocated in order to clear space for a private parking spot. All of the loading and unloading procedures described above would remain the same except that the vehicles would be parked in a spot which is off the street and tucked behind the building, greatly reducing public visibility.

---

[3] 16 CCR § 5049

[4] 16 CCR § 5418

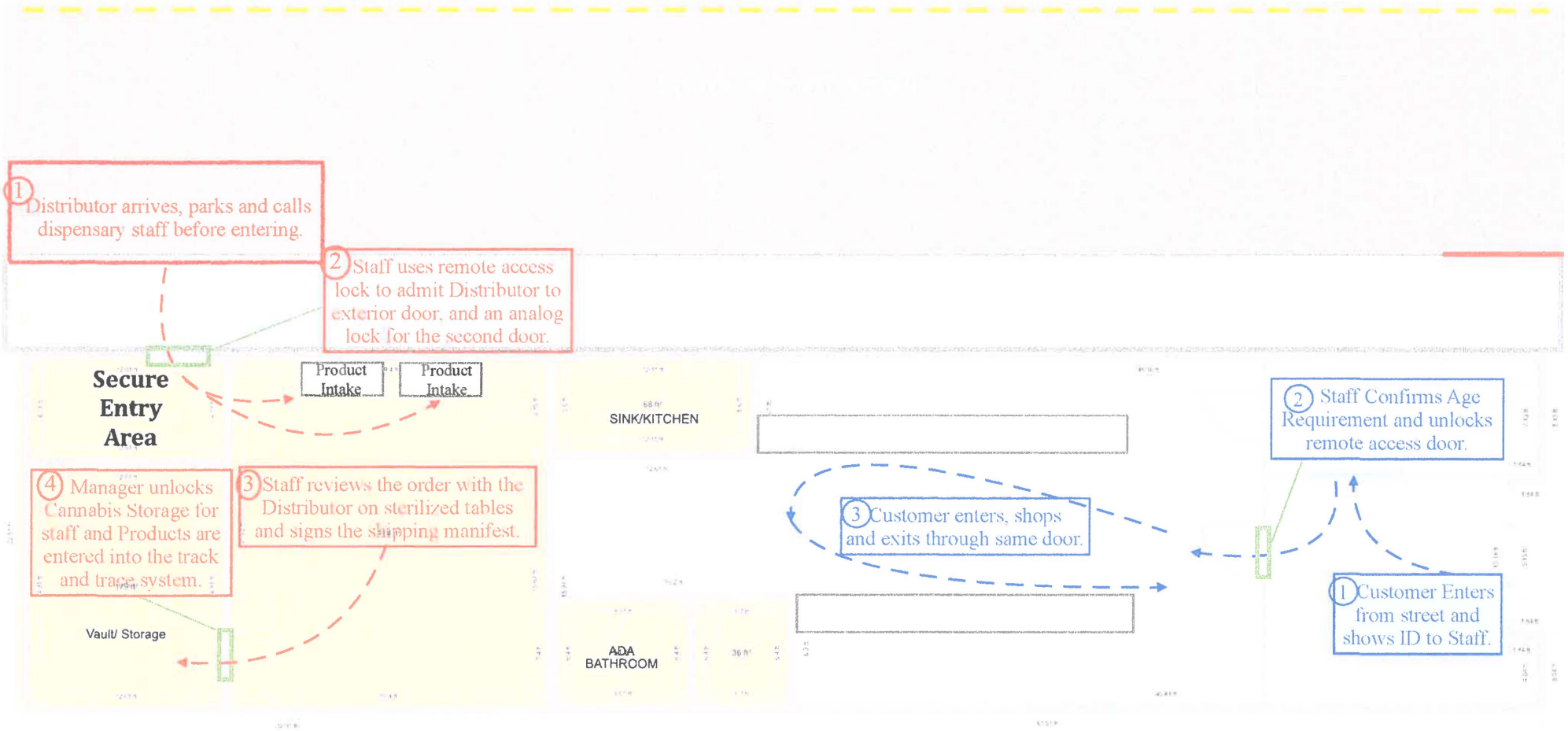


Scale 1/145. Plan created with Archiplain. https://archiplain.com/

# EXHIBIT A

**Legend:**

PROPERTY LINE
BUILDING ENVELOPE
EDGE OF PAVEMENT
FENCE LINE
BUILDING SETBACK LINE
CONTOUR LINES

THE DISCHARGE OF POLLUTANTS TO ANY STORM DRAINAGE SYSTEM IS PROHIBITED. NO SOLID WASTE, PETROLEUM BYPRODUCTS, SOIL PARTICULATES, CONSTRUCTION WASTE MATERIALS, OR WASTEWATER GENERATED ON CONSTRUCTION SITES OR BY CONSTRUCTION ACTIVITIES SHALL BE PLACED, CONVEYED, OR DISCHARGED INTO THE STREET, GUTTEROR STORM DRAIN SYSTEM.....

1 Site Plan
APN: 002-272-16 Scale 1/8" = 1'

| # | REVISIONS | DATE | BY |
|---|---|---|---|
| 3 | SHEET REVISIONS | 8/22/2021 | FSM |

RUFF + ASSOCIATES

RUFF + ASSOCIATES
Architecture Planning Development
100 West Standley Street, Ukiah, CA 95482
Phone: 707-472-0925 Fax: 707-472-0927
rmruff@ruffarchitects.com
COPYRIGHT © BY RUFF + ASSOCIATES, ALL RIGHTS RESERVED.

CA LICENSE # C17736 - 8587217

LICENSED ARCHITECT RICHARD RUFF NO. C17736 RENEW 11-30-21 STATE OF CALIFORNIA

DAVID MCGINTY
195 SEMINARY AVE
UKIAH, CA 95482
APN: 002-191-23

SHEET TITLE
SITE PLAN

| | |
|---|---|
| DRAWN BY | FSM |
| CHECKED BY | RPR |
| DATE SUBMITTED | 8-27-2021 |
| DATE CREATED | 8-27-2021 |
| SCALE | AS NOTED |
| PAGE | A1 |
| SHEET | 4 OF 10 |

# EXHIBIT B

# Proposed Demolition Plan at 195 Seminary Ave

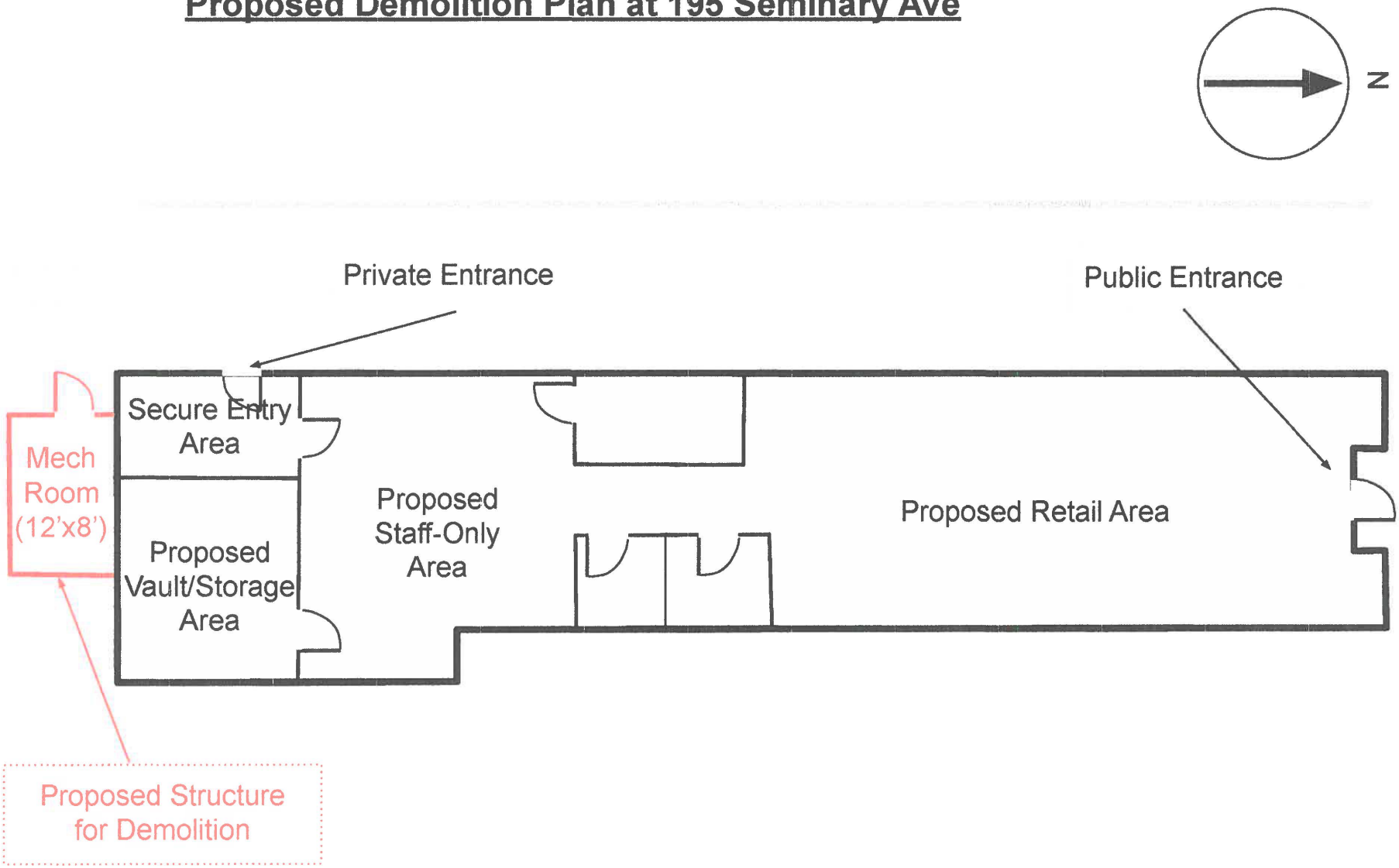

City of Ukiah

COMMUNITY DEVELOPMENT DEPARTMENT

# PROJECT REVIEW REFERRAL

## Please provide comments by: November 26, 2021

The City of Ukiah Community Development Department is soliciting input on the project described below for use in the staff analysis, CEQA document, and public hearing documents. Please identify any questions you have or missing information you need to complete your review, as well as suggested Conditions of Approval.

| TO: | | | |
|---|---|---|---|
| X | City of Ukiah Community Development Director | X | Mendocino County Planning & Building Services |
| X | City of Ukiah Building Official | X | City of Ukiah Electric Utility Department |
| X | City of Ukiah Public Works Department | X | Mendocino County Airport Land Use Committee |
| X | Ukiah Valley Fire Authority | X | CA Department of Cannabis Control (DCC) |
| X | City of Ukiah Police Department | X | |
| **FROM PROJECT PLANNER: Jesse Davis, Planning Manager** | | | |

| **PROJECT INFORMATION:** | |
|---|---|
| **Project Name & Permit #:** | Local Roots Dispensary– Cannabis Retail; #21-6584 |
| **Site Address & APN:** | 195 Seminary Avenue; APN 002-272-16-00 |
| **General Plan:** | "C" Commercial |
| **Zoning:** | "C-1" Limited Commercial |
| **Airport Compatibility Zone:** | Zone 4: Outer Approach/Departure Zone; Urban Overlay Zone |
| **Date Filed:** | 10/27/2021 |
| **Resubmittal:** | N/A |
| **Date Referred:** | 11/10/2021 |
| **Prev. Projects on Site (include file #)** | N/A |
| **Applicant/Agent Name:** | Dylan McGinty (Applicant) /Robert J. Molineaux (Agent) |
| **Phone:** | 707-489-4162 & 415-328-6321 |
| **Email:** | d.mcginty@live.com; rjmolineaux@gmail.com |
| **Project Summary:** The 'Applicant' requests a ' Dispensary Use Permit' to undertake a 'Cannabis Retail Business' within the City of Ukiah operated in accordance with State and local regulations. Per Ukiah City Code §5717, the Applicant will operate a 'Dispensary' that facilitates the delivery of cannabis and/or cannabis products in addition to retail sale from the subject property. An existing commercial structure will be utilized. No expansion of the building footprint or major façade improvement are proposed, but interior tenant improvements will be undertaken. | |

Please indicate whether you have comments and sign and date below. Return this Project Referral Form by the date noted above to the Project Planner listed.

**Name and Affiliation/Department (please print)** _____

☐ No Comment

☒ Comments / Conditions of Approval Attached

**Signature** [signature] **Date** 12-3-21

City of Ukiah

COMMUNITY DEVELOPMENT DEPARTMENT

BUSINESS WILL BE OPERATED IN AN EXISTING BUILDING. BUSINESSES LOCATED IN ZONE 4, INCLUDING LOCAL RETAIL, ARE CONDITIONALLY COMPATIBLE PER THE UKIAH MUNICIPAL LAND USE COMPATABILITY PLAN (UMLUCP). PROJECT WOULD NOT REQUIRE ALUC REVIEW.

| | |
|---|---|
| **From:** | Jason Benson |
| **To:** | Jesse Davis |
| **Cc:** | Tim Eriksen; Craig Schlatter |
| **Subject:** | RE: 195 Seminary - Draft Materials Cannabis Dispensary (Local Roots) |
| **Date:** | Friday, February 4, 2022 3:41:39 PM |
| **Attachments:** | image002.png<br>image004.png<br>image003.png |

---

Jesse –

See below for PW edits to the project description.

- Installation of three street trees along School Street, and one street tree on Seminary Avenue. The species and location of the trees shall be provided to the City Engineer and planted after approval.

Regarding the item for On Street Parking /Loading Zone:

- The PW staff will make a recommendation to the City Council for a Loading Zone in this location. However, there is no guarantee that the City Council will approve this request.

Jason Benson, PE
Public Works – Senior Engineer
C: (707)510-5485

---

**From:** Jesse Davis
**Sent:** Friday, February 4, 2022 1:16 PM
**To:** Craig Schlatter <cschlatter@cityofukiah.com>; Jason Benson <jbenson@cityofukiah.com>
**Subject:** RE: 195 Seminary - Draft Materials Cannabis Dispensary (Local Roots)

Hello Craig and Jason,

Please see attached for draft hearing packet materials for your review to ensure placement of the requested cannabis dispensary on the regular PC Hearing calendar for 02/23/22.

Craig, both Mireya and Michelle have provided input and suggestions earlier this week. I've incorporated nearly all suggested edits. As time permits, please review and let me know if you have any questions or edits.

Jason, could you please review the updated project description to determine if additional conditions or instructions are warranted for the requested parking space to loading zone conversion and the installation of three street trees along School Street? Additional information pertaining to the loading zone is included in attachment 4.

Best Regards,
Jesse Davis

| | |
|---|---|
| **From:** | Jesse Davis |
| **To:** | Dylan Mcginty |
| **Subject:** | FW: City of Ukiah Project Referral - Dispensary Use Permit (#21-6584) - 195 Seminary Avenue |
| **Date:** | Tuesday, November 23, 2021 10:41:00 AM |
| **Attachments:** | image002.png<br>image004.png<br>image003.png |

FYI

**From:** Jason Benson
**Sent:** Friday, November 19, 2021 12:57 PM
**To:** Jesse Davis <jdavis@cityofukiah.com>
**Cc:** Tim Eriksen <teriksen@cityofukiah.com>
**Subject:** RE: City of Ukiah Project Referral - Dispensary Use Permit (#21-6584) - 195 Seminary Avenue

Jesse –

Public Works has reviewed this project, and we have no comments.

Jason Benson, PE
Public Works – Senior Engineer
C: (707)510-5485

**From:** Jesse Davis
**Sent:** Tuesday, November 9, 2021 4:59 PM
**Subject:** City of Ukiah Project Referral - Dispensary Use Permit (#21-6584) - 195 Seminary Avenue

Good Evening,

Greetings, and I hope this message finds you well. Please see attached for an initial public agency referral for a proposed Dispensary Use Permit at 195 Seminary Avenue, Ukiah, CA, 95482 (APN: 002-272-16). A project description is included, below:

*The 'Applicant' requests a Dispensary Use Permit to undertake a Cannabis Retail Business within the City of Ukiah operated in accordance with State and local regulations. Per Ukiah City Code §5717, the Applicant will operate a Dispensary that facilitates the delivery of cannabis and/or cannabis products in addition to retail sale from the subject property. An existing commercial structure will be utilized. No expansion of the building footprint or major façade improvement are proposed, but interior tenant improvements will be undertaken.*

The requested comments for this public referral are appreciated by **November 26, 2021**. Thank you in advance.

Best Regards,
Jesse Davis

| | |
|---|---|
| **From:** | Jesse Davis |
| **To:** | Dylan Mcginty |
| **Subject:** | FW: City of Ukiah Project Referral - Dispensary Use Permit (#21-6584) - 195 Seminary Avenue |
| **Date:** | Friday, November 12, 2021 3:04:00 PM |
| **Attachments:** | image002.png<br>image003.png |

FYI

**From:** Matthew Keizer
**Sent:** Wednesday, November 10, 2021 7:17 AM
**To:** Jesse Davis <jdavis@cityofukiah.com>
**Subject:** RE: City of Ukiah Project Referral - Dispensary Use Permit (#21-6584) - 195 Seminary Avenue

1. A permit will be required for T.I. (Tenant Improvements) Please submit plans, building permit application, and hardship form see links below. Please submit four complete plan sets, two wet stamped and signed

2. The design and construction of all site alterations shall comply with the 2019 California Building Code, 2019 Plumbing Code, 2019 Electrical Code, 2019 California Mechanical Code, 2019 California Fire Code, 2019 California Energy Code, 2019 Title 24 California Energy Efficiency Standards, 2019 California Green Building Standards Code and City of Ukiah Ordinances and Amendments.

Useful City Hand outs and submittal documents links below.

http://www.cityofukiah.com/NewWeb/wp-content/uploads/2012/07/Building-Permit-Application-03192020-fillable.pdf

http://www.cityofukiah.com/NewWeb/wp-content/uploads/2021/11/Disability-Access-Requirements-and-Resources.pdf

http://www.cityofukiah.com/NewWeb/wp-content/uploads/2021/11/Tenant-Improvement-Handout.pdf

http://www.cityofukiah.com/NewWeb/wp-content/uploads/2021/11/Checklist-Commerical-Permit-Applicaiton.pdf

http://www.cityofukiah.com/NewWeb/wp-content/uploads/2021/11/Unreasonable-Hardship-Accessibility-Form.pdf

http://www.cityofukiah.com/NewWeb/wp-content/uploads/2021/11/Commercial-Building-Permit-Submittal-Requirements.pdf

**Matt Keizer, CBO, MCP, CFM**
**Building Official**
**Code Compliance Officer**
Email: mkeizer@cityofukiah.com
300 Seminary Ave
Ukiah, CA 95482
Office 707-467-5786
Desk 707-467-5718
Fax 707-463-6204
Inspection 707-463-6739
http://www.cityofukiah.com/community-development/

---

**From:** Jesse Davis <jdavis@cityofukiah.com>
**Sent:** Tuesday, November 9, 2021 4:59 PM
**Subject:** City of Ukiah Project Referral - Dispensary Use Permit (#21-6584) - 195 Seminary Avenue

Good Evening,

Greetings, and I hope this message finds you well. Please see attached for an initial public agency referral for a proposed Dispensary Use Permit at 195 Seminary Avenue, Ukiah, CA, 95482 (APN: 002-272-16). A project description is included, below:

*The 'Applicant' requests a Dispensary Use Permit to undertake a Cannabis Retail Business within the City of Ukiah operated in accordance with State and local regulations. Per Ukiah City Code §5717, the Applicant will operate a Dispensary that facilitates the delivery of cannabis and/or cannabis products in addition to retail sale from the subject property. An existing commercial structure will be utilized. No expansion of the building footprint or major façade improvement are proposed, but interior tenant improvements will be undertaken.*

The requested comments for this public referral are appreciated by **November 26, 2021**. Thank you in advance.

Best Regards,
Jesse Davis

**Jesse Davis, AICP**
Planning Manager
Department of Community Development
300 Seminary Avenue, Ukiah, CA 95482

| | |
|---|---|
| **From:** | Jesse Davis |
| **To:** | Dylan Mcginty |
| **Subject:** | FW: City of Ukiah Project Referral - Dispensary Use Permit (#21-6584) - 195 Seminary Avenue |
| **Date:** | Friday, November 12, 2021 3:04:00 PM |
| **Attachments:** | image002.png<br>image003.png |

FYI

**From:** Locals@Cannabis [mailto:locals@cannabis.ca.gov]
**Sent:** Wednesday, November 10, 2021 11:31 AM
**To:** Jesse Davis <jdavis@cityofukiah.com>
**Subject:** RE: City of Ukiah Project Referral - Dispensary Use Permit (#21-6584) - 195 Seminary Avenue

**[EXTERNAL EMAIL]** DO NOT CLICK links or attachments unless you recognize the sender and know the content is safe.

Good morning,

This appears to be a local issue which the Department does not have any authority over to offer an opinion.

Thank you,

**Janet Zimmer**
Staff Services Manager I
Equity and Local Liaison Unit

desk: 916-465-9057
844-61-CA-DCC (844-612-2322)
www.cannabis.ca.gov

Department of Cannabis Control
CALIFORNIA

**From:** Jesse Davis <jdavis@cityofukiah.com>
**Sent:** Tuesday, November 9, 2021 4:59 PM
**Subject:** City of Ukiah Project Referral - Dispensary Use Permit (#21-6584) - 195 Seminary Avenue

[EXTERNAL]: jdavis@cityofukiah.com

CAUTION: THIS EMAIL ORIGINATED OUTSIDE THE DEPARTMENT OF CANNABIS CONTROL!
DO NOT: click links or open attachments unless you know the content is safe.
NEVER: provide credentials on websites via a clicked link in an Email.

Good Evening,

Greetings, and I hope this message finds you well. Please see attached for an initial public agency referral for a proposed Dispensary Use Permit at 195 Seminary Avenue, Ukiah, CA, 95482 (APN: 002-272-16). A project description is included, below:

*The 'Applicant' requests a Dispensary Use Permit to undertake a Cannabis Retail Business within the City of Ukiah operated in accordance with State and local regulations. Per Ukiah City Code §5717, the Applicant will operate a Dispensary that facilitates the delivery of cannabis and/or cannabis products in addition to retail sale from the subject property. An existing commercial structure will be utilized. No expansion of the building footprint or major façade improvement are proposed, but interior tenant improvements will be undertaken.*

The requested comments for this public referral are appreciated by **November 26, 2021**. Thank you in advance.

Best Regards,
Jesse Davis

City of Ukiah
**Jesse Davis, AICP**
Planning Manager
Department of Community Development
300 Seminary Avenue, Ukiah, CA 95482
P: 707.463.6207
www.cityofukiah.com/community-development

POLICE
CITY OF UKIAH
"Safety, Professionalism & Community Service"

**Noble Waidelich**
Chief of Police

To: Jesse Davis
CC: Noble Waidelich
From: Cedric Crook
Subject: Local Roots Dispensary-Cannabis Retail #21-6584
Date: 11/22/21

On November 22nd, 2021, I reviewed the DOJ applicant fingerprint responses for Quadalupe Perea, Zachary Allen, and Dylan McGinty. There was no disqualifying information for these applicants.

Cedric Crook
Lieutenant
Ukiah Police Department

300 Seminary Avenue | Ukiah, California 95482
Telephone: (707) 463-6262 | Fax: (707) 462-6068 | www.ukiahpolice.com

POLICE
CITY OF UKIAH
"Safety, Professionalism & Community Service"

**Noble Waidelich**
Chief of Police

To: Jesse Davis
CC: Noble Waidelich
From: Cedric Crook
Subject: Local Roots Dispensary-Cannabis Retail #21-6584
Date: 11/23/21

On November 23rd, 2021, I reviewed the Project Review Referral regarding the Local Roots Dispensary Application (21-6584). The Police Department has the following comments or requests the following;

The business permittee notes in the supplied documents the requirement to comply with Ukiah City Code ordinance (5708A) regarding criminal history checks of employees, however it appears that the Ukiah Police Department has not received criminal history checks on all of the prospective employees. Criminal history checks have not been completed on Jacklyn Nicole Allen, Monica Doster, and Katrina Cavender.

Security surveillance cameras shall be installed to monitor the main entrance and exterior of the premises to discourage loitering, crime, illegal or nuisance activities. The referral references that the video surveillance data will be stored on a 2 Terabyte memory drive which can easily store up to 90 days of footage. Security video shall be maintained for 90 days per 5708H7.

Prior to occupancy, the Permittee shall provide the Ukiah Police Department with the current name and primary and secondary telephone numbers of at least one 24-hour on-call manager to address and resolve complaints and to respond to operating problems or concerns associated with the business.

The area of the 100 block of Seminary Ave. and 500 block of S. School St. do not pose an area with significant numbers of calls for police service compared to other areas of the City.

Per 5708L, "Dispensary staff shall receive appropriate training for their intended duties to ensure understanding of rules and procedures regarding dispensing in compliance with State and local law, and the dispensary shall employ properly trained or use professionally hired security personnel in accordance with the conditions of its permit. All security personnel hired or contracted for by the dispensary shall comply with Business and Professions Code Division 3, Chapters 11.4 and 11.5, or as may be amended.".

The Ukiah Police Department does have concerns on the plans to load and unload the delivery vehicle due to the lack of a parking lot and accessible loading area. The Police Department also has concerns regarding the size and number of unfortified windows on the building in regards to subjects making forced entry into the business (5708G).

LT. C. Crook
Cedric Crook
Lieutenant
Ukiah Police Department

300 Seminary Avenue | Ukiah, California 95482
Telephone: (707) 463-6262 | Fax: (707) 462-6068 | www.ukiahpolice.com

| | |
|---|---|
| **From:** | Jesse Davis |
| **To:** | Dylan Mcginty |
| **Subject:** | FW: City of Ukiah Project Referral - Dispensary Use Permit (#21-6584) - 195 Seminary Avenue |
| **Date:** | Friday, November 12, 2021 3:04:00 PM |
| **Attachments:** | image002.png<br>image003.png |

FYI

**From:** Locals@Cannabis [mailto:locals@cannabis.ca.gov]
**Sent:** Wednesday, November 10, 2021 11:31 AM
**To:** Jesse Davis <jdavis@cityofukiah.com>
**Subject:** RE: City of Ukiah Project Referral - Dispensary Use Permit (#21-6584) - 195 Seminary Avenue

**[EXTERNAL EMAIL]** DO NOT CLICK links or attachments unless you recognize the sender and know the content is safe.

Good morning,

This appears to be a local issue which the Department does not have any authority over to offer an opinion.

Thank you,

**Janet Zimmer**
Staff Services Manager I
Equity and Local Liaison Unit

desk: 916-465-9057
844-61-CA-DCC (844-612-2322)
www.cannabis.ca.gov

Department of Cannabis Control
CALIFORNIA

**From:** Jesse Davis <jdavis@cityofukiah.com>
**Sent:** Tuesday, November 9, 2021 4:59 PM
**Subject:** City of Ukiah Project Referral - Dispensary Use Permit (#21-6584) - 195 Seminary Avenue

[EXTERNAL]: jdavis@cityofukiah.com

CAUTION: THIS EMAIL ORIGINATED OUTSIDE THE DEPARTMENT OF CANNABIS CONTROL!
DO NOT: click links or open attachments unless you know the content is safe.
NEVER: provide credentials on websites via a clicked link in an Email.

Good Evening,

Greetings, and I hope this message finds you well. Please see attached for an initial public agency referral for a proposed Dispensary Use Permit at 195 Seminary Avenue, Ukiah, CA, 95482 (APN: 002-272-16). A project description is included, below:

*The 'Applicant' requests a Dispensary Use Permit to undertake a Cannabis Retail Business within the City of Ukiah operated in accordance with State and local regulations. Per Ukiah City Code §5717, the Applicant will operate a Dispensary that facilitates the delivery of cannabis and/or cannabis products in addition to retail sale from the subject property. An existing commercial structure will be utilized. No expansion of the building footprint or major façade improvement are proposed, but interior tenant improvements will be undertaken.*

The requested comments for this public referral are appreciated by **November 26, 2021**. Thank you in advance.

Best Regards,
Jesse Davis

City of Ukiah
**Jesse Davis, AICP**
Planning Manager
Department of Community Development
300 Seminary Avenue, Ukiah, CA 95482
P: 707.463.6207
www.cityofukiah.com/community-development

**From:** Janet Freeman
**To:** Jesse Davis
**Subject:** Proposed pot store
**Date:** Wednesday, February 16, 2022 3:27:45 PM

---

[EXTERNAL EMAIL] DO NOT CLICK links or attachments unless you recognize the sender and know the content is safe.

To: Jesse Davis, City Planning

Subject : Request for use permit to sell cannabis and/or cannabis products at 195 Seminary Ave.

I strenuously object to allowing the sale of pot 2 blocks from City Hall, 2 and a half blocks from a school and a park on the "coveted" west side. This area is one of the nicer areas, surrounded by handsome, older homes. This business would be a black eye on any neighborhood. It is also one block from the seasonal ice rink and the plaza where many Ukiah's children congregate. Such a business should be located in an industrial area away from children.

Ukiah is trying to upgrade its image to attract tourists by beautifying the downtown. The avenue leading up to the civic center is a lovely landscaped avenue. We don't need a pot store to detract from it. If we allow a pot store we may as well move the Forrest Club there. Calling it a cannabis dispensary doesn't change it from a pot selling store. As the maid in Gone With the Wind said, "You can dress yourselves up in fancy clothes, but you're still mules in horses harness."